SHAKER HEIGHTS

Landmark Commission Agenda
Via Video and Audio Conference Due to COVID-19 Public Health Emergency
Wednesday, September 23, 2020 7PM

Zoom webinar ID: 953 5215 6480
Password: 33553400

For the safety of staff and residents, in-person attendance is not permitted. Join the Zoom meeting from a PC, Mac, iPad, iPhone or Android device. Join online to listen and watch at https://zoom.us/j/95352156480?pwd=UXRIbmNmdEtuU1RtN3FOdDNVakRxUT09, Password: 33553400: Description: Landmark Commission Meeting; or join by phone to listen at 833-548-0282 (toll free); Webinar ID: 953 5215 6480, Password: 33553400.

Residents may submit comments/questions regarding items on the agenda at least 6 hours in advance of the meeting by emailing Cameron Roberts at cameron.roberts@shakeronline.com; staff will respond prior to the meeting.

1. Approval of Minutes from the August 26, 2020 Meeting.

   Documents:

   2. LC MINUTES_08-26-20.PDF

2. Certificate of Appropriateness: 2540 North Moreland Boulevard (Shaker Park East Apartments) - Rooftop Pergola.
   Bruce Rose, tenant.

   Documents:

   3. 2540_NORTH_MORELAND_MEMO_09-23-20.PDF
   4. 2540 NORTH MORELAND - APPLICATION MATERIALS.PDF

3. Certificate of Appropriateness: 13165 Larchmere Boulevard (BP Gas Station) - Canopies.
   Carleton Moore, contractor, CWM Services.

   Documents:

   5. 13165_LARCHMERE_MEMO_09-23-20.PDF
   6. 13165 LARCHMERE - APPLICATION MATERIALS.PDF

4. Staff Approvals

   Documents:

   7. STAFF APPROVAL REPORT SEPTEMBER 2020.PDF

5. Other Business

To request an accommodation for a person with a disability, call the City's ADA Coordinator at 216-491-1440, or Ohio Relay Service at 711 for TTY users.

SHAKER HEIGHTS

Landmark Commission / Architectural Board of Review Minutes
Wednesday, August 26, 2020
7 P.M.
Via Zoom Webinar

Members Present: Nancy Moore, Landmark Commission, Chair
Clifford Brown, Landmark Commission, Member
Meghan Hays, Landmark Commission, Member
Crystal Montgomery, Landmark Commission, Member
Ron Reed, Landmark Commission, Member

Others Present: Cameron Roberts, Planner
Daniel Feinstein, Senior Planner
Greydon Petznick, Architectural Board of Review, Member

The meeting was called to order by Chair Moore at 7:07 p.m.

* * * *

Approval of the June 24, 2020 Meeting Minutes

It was moved by Mr. Reed and seconded by Mr. Brown to approve the minutes.

Ayes: All
Nays: None

Motion Carried

* * * *

Certificate of Appropriateness: 3756 Lee Road (Lee-Scottsdale Building)—Wireless Antennae.
Ronald Gainar, representing T-Mobile.

Mr. Roberts stated that the application is for the installation of new wireless antennas on the rooftop of 3756 Lee Road, also known as the Lee-Scottsdale Building. He introduced Ronald Gainar as the applicant for the case, representing T-Mobile.

Mr. Roberts explained that 3756 Lee Road is a local landmark building. It was designed by the architects Fox, Duthie, and Foose and construction for the building was complete in 1930. The building was designated as a landmark in 1998.

Mr. Roberts shared pictures of the existing rooftop conditions on the building. He explained that the building has a long history of wireless antenna installations that have been reviewed and approved by the Landmark Commission. For these approvals, some of the design elements that the Commission has

previously required included: a brick vinyl wrap on the antennas to blend into the existing penthouse structure, painting all associated equipment brown to blend into the brick exterior, and requiring that all cabling be located at the bottom of the penthouse structure to reduce visibility from the street. In 2003, the Landmark Commission also approved a faux brick addition to the top of the penthouse, which houses more antennas. However, Mr. Roberts explained that the proposed antennas for the application would all be installed on the exterior of the structure.

Mr. Roberts presented the existing antenna layout on the exterior of the penthouse structure. He explained that the applicant intents to remove four existing antennas and relocate one existing antenna.

Mr. Roberts presented the proposed antenna layout. He said the applicant proposes to install seven new antennas and identified the location of each, in addition to the location of the relocated antenna. He said the applicant intends to use a brick vinyl wrap on the antennas that matches what currently exists and all associated equipment will be painted to blend in with the brick exterior.

Mr. Roberts said the applicant provided several photo simulations to illustrate the change in view from the ground with the additional antenna installations. Looking north at the building from the City of Cleveland, several additional antennas may be seen, but the change in view is not significant. The vinyl wrap and painted equipment help reduce visibility by blending into the penthouse structure. Looking south at the building, one additional antenna may be seen. Mr. Roberts stated that maybe most importantly, the antennas will not be visible at all from the front façade view, which is where most of the unique and historic architectural details on the building are located.

Mr. Roberts briefly covered the Landmark Commission design guidelines and existing precedent for the application. He shared that the design guidelines do not specifically cover wireless antennas, but they do cover general exterior alterations. In those cases, the guidelines state that alterations should not destroy historic materials or impact the historic character of the property. Regarding precedent, wireless antennas have been previously approved on several landmark buildings. For those approvals, design elements such as vinyl wraps, stealth housing, or painting the equipment were required to make the equipment as inconspicuous as possible.

Mr. Roberts said that staff recommends approval of the application with one condition that all of the cabling remain near the bottom of the existing penthouse, which has been a standard condition for past antenna proposals on the property.

Mr. Roberts asked Mr. Feinstein if he had anything to add from an Architectural Board of Review or Zoning perspective.

Mr. Feinstein stated that for zoning, antennas on top of a building are allowed as an accessory use. That is done to encourage antennas on existing building, rather than the building of separate antenna towers. The Architectural Board of Review has reviewed many antennas in the City and routinely require that the equipment incorporate design elements to make them as inconspicuous as possible.

Ms. Moore asked Ronald Gainar, applicant, whether he would like to add anything.

Mr. Gainar explained that the new antennas are a response to the recent merger between Spring and T-Mobile. He mentioned that the cabling condition is not an issue.

Mr. Brown asked whether the additional equipment is temporary due to the merger.

Mr. Gainar sshared that eventually the equipment for both companies will be integrated. Once that happens, he imagines that they will be back sometime within the next two years to either remove some of the antennas or change the existing system.

Mr. Reed stated that the application seems straightforward and moved to approve the application with staff's one condition:

1. All equipment cabling must remain near the bottom of the existing penthouse.

Mr. Brown seconded the motion.

Roll Call: Ayes: 5
Nays: 0

Mr. Feinstein mentioned that since there is not a quorum for the Architectural Board of Review, the application will be reviewed at their next meeting. He said he would follow up with the applicant with more details.

Preliminary Review: 2540 North Moreland Boulevard—Rooftop Pergola. Bruce Rose, tenant.

Mr. Roberts said that this is a preliminary review to provide initial input for a proposed rooftop pergola at the Shaker Park East apartment building within the Shaker Square Historic District. He shared that the applicant, Mr. Rose, is a tenant of the building and has access to a private roof patio on the southeastern corner of the building. Mr. Rose is proposing to install a pergola on the private patio.

Mr. Roberts continued, saying that the proposed pergola is constructed of cedar and eleven feet by thirteen feet in size. It features an aluminum louvered roof, which can be opened or closed for air ventilation. He said that based on the photos provided by the applicant, the pergola would be slightly noticeable from a street view and closely match the height of the existing bulkhead. He said that the applicant's intent is to anchor the posts of the pergola with cement-filled flower boxes, rather than bolt the structure to the building's rooftop. Based on this intent, the Building Department has said that the applicant will need a design professional to confirm that the building's roof can support both the live and dead loads of the pergola.

Mr. Roberts said that staff recommended this preliminary review before the applicant spends too much time on the project in order to receive both the Landmark Commission or Architectural Board of Review's initial thoughts on the proposal. He mentioned that the proposal did go before the Architectural Board of Review several weeks ago for a preliminary review. He asked Mr. Feinstein to share the takeaways of that discussion.

Mr. Feinstein said that ABR members felt it would be best for the pergola to be located as far from the edge of the roof as possible to minimize its view from the ground. They indicated that this feedback was from looking at the project both from a historic and general design perspective. ABR members noted that the pergola does not match the character of the building, but they were less concerned about this if it was not noticeable to onlookers.

Ms. Moore opened the conversation to Landmark Commission and Architectural Board of Review members.

Mr. Brown asked whether the applicant intends for the pergola to be a temporary structure during his tenancy, or whether it would be grandfathered in with the property.

Bruce Rose, tenant and applicant, noted that he has no intention of moving anytime soon and that there are decisions to sell the pergola to the landlord if he were to move.

Mr. Reed asked whether the pergola will occupy the location of the existing pavers.

Mr. Rose confirmed that the pergola would need to be on the pavers in their existing location.

Ms. Moore asked whether there is room within the existing pavers to move the pergola based on ABR's suggestion to move the pergola as far away from the roof edge as possible.

Mr. Rose confirmed that there is room to move the pergola, but not to the extend that it would be completely invisible from the ground. The pergola would be about the same height as the existing bulkhead and the very top of the bulkhead can be seen from below.

After some discussion, Landmark Commission members corrected that the pergola would be more noticeable than the bulkhead since the bulkhead structure is slanted and the tallest point of the structure is set back further from the roof.

Mr. Brown asked whether a precedent would be set if the pergola were approved and whether it could allow the landlord to install their own pergola structure above the communal patio.

Mr. Feinstein said that design review would still be required for other pergola applications, but approval of this application could help the case of future applications. Similarities in vantage points would need to be taken into account.

Mr. Roberts agreed with this.

Mr. Brown asked the applicant whether he utilizes the patio as much as possible as long as the weather in Northeast Ohio permits it.

Mr. Rose confirmed and said that is why he wants the pergola. He shared that the sun is too intense to stay on the patio for any long duration of time and the louvered roof would allow flexibility based on the weather.

Mr. Brown asked the applicant whether he has received approval from the building's landlord.

Mr. Rose confirmed that he has received permission from the landlord with the conditions that he be insured for any problems that could result from it and that he goes through any approval process required by the City.

Ms. Hays asked whether this review is required by the City even though it is a temporary structure.

Mr. Feinstein clarified that this type of structure always receives design review by the City, whether it is a Landmark or not.

Ms. Hays was thankful for the clarification and stated that she does not recall ever making a determination on a pergola during her time on the Landmark Commission.

Mr. Feinstein agreed that he cannot recall a pergola going before Landmark Commission, but that could be the result of other property owners not asking the City beforehand.

Mr. Roberts shared that he tried to find precedent related to the Landmark Commission's review of pergola structures and there was not much information available. There may be some that never went through the official process.

Mr. Reed commented on the aesthetics of the pergola and said the design is somewhat out of character for the building, as the Architectural Board of Review had mentioned. However, he said the cedar material is a good direction and he believes the light wood color will not be very visible.

Ms. Montgomery asked where the applicant was standing for his street-view photo of the rooftop.

Mr. Rose said he was located across the street from the building and that it was difficult to find any view where the bulkhead was visible due to the amount of tree cover on North Moreland.

Ms. Hays suggested that the applicant take a photo from a similar street view with an object that is the equivalent height of the pergola. That would help the Commission understand the difference in visibility between the existing bulkhead and the proposed pergola.

Mr. Feinstein suggested using a ladder or someone holding an object up to the approximate height.

Commission members agreed that they will want to see this depiction.

Commission members asked a number of additional questions regarding the dimensions of different features on the rooftop, including the bulkhead height, parapet height, patio size, and distance between the roof edge and the patio pavers.

Mr. Feinstein added that the applicant should use chalk to indicate where the pergola posts will be located on the patio pavers.

Mr. Brown suggested that the applicant look into smaller pergola options that may be less visible from the ground.

The preliminary review of this application concluded with the suggestion that the following information and materials be submitted prior to a formal review:

1. Photo of the roof patio with the intended locations of the pergola posts identified with chalk. The location should be moved as far away from the edge of the roof as possible.
2. Street/sidewalk view photo with an object at the approximate height of the pergola in order to illustrate the expected visibility from the ground.

3. Exact dimensions for the following building features: roof patio area, parapet height, bulkhead height, and distance between the roof patio and parapet.
4. Investigate smaller and less tall pergola options that still meet the applicant's needs.

* * * *

Staff Approvals

Ms. Moore asked whether there were any questions on the staff approvals provided in the meeting packet. There were none.

* * * *

Other Business

Mr. Roberts informed the Commission that he wanted to provide a brief update on the City's plans for the 2020 Preservation Awards Ceremony. He said that since the City is currently not allowing in-person events or meetings due to the pandemic, Staff have decided to substitute the awards ceremony for a pre-recorded video that will showcase the awarded projects on social media. He said that this is what the Cleveland Restoration Society did for their awards program and it was well received. He said that after discussions with the city's Communications and Marketing team, it was believed that a pre-recorded video would be the better method for viewership than a one-time virtual event.

Commission members were supportive of the alternative strategy for the awards ceremony.

Mr. Roberts said that like previous years, he would like to have Commission Members present the awarded projects.

Ms. Hays and Mr. Brown both offered to help.

Mr. Roberts stated that he would follow up via email with more information and an official request for volunteers to help voice the program.

* * * *

There being no further business, the meeting was adjourned at 8:07 p.m. The next meeting will be October 28, 2020.

_____

Cameron R. Roberts, Secretary
Landmark Commission

SHAKER HEIGHTS

Memorandum

To: Members of the Landmark Commission
Members of the Architectural Board of Review

From: Cameron Roberts, Planner
Daniel Feinstein, Senior Planner

Date: September 18, 2020

Re: **Certificate of Appropriateness: 2540 North Moreland Boulevard (Shaker Park East Apartments)—Rooftop Pergola.** Bruce Rose, tenant.

Meeting: September 23, 2020

2540 North Moreland (August 2019 Photo)

Background

The Shaker Park East apartment building is located within the Shaker Square Historic District, which was established by ordinance in 1980. The property was constructed in 1953. The building's brick exterior and white trim are consistent with much of the multifamily architecture found throughout the Shaker Square neighborhood.

The building's rooftop features two roof patios: one large, communal patio and a smaller private patio. Bruce Rose, a tenant of the building, is the occupant with access to the private roof patio and he proposes to install a pergola structure within the space. He has received approval from the building's management, Capitol Property Management, to do this under the condition that he receive all necessary City approvals.

The pergola structure that Mr. Rose has chosen is constructed of cedar and finished in a Mocha Brown stain. It is approximately 13' x 11' in size, and 8' 3" in height. The structure includes an aluminum louvered roof that can be manually opened or closed. Rather than bolting the structure directly to the rooftop, all four posts will be anchored with cement-filled flower pots. Specifications and photos of the proposed pergola model are in the meeting packet.

The Landmark Commission and Architectural Board of Review held a preliminary review for this proposal at their August 26, 2020 meeting. Members were not opposed to the addition of a pergola, but their discussion included concerns regarding how much of the structure would be visible from a ground view. To better understand this, Commission and Board members requested the following information prior to a formal review:

1. A photo of the roof patio with the intended locations of the pergola posts identified with chalk. The location should be moved as far away from the edge of the roof as possible.
2. A street/sidewalk view photo with an object at the approximate height of the pergola in order to illustrate the expected visibility from the ground.
3. Exact dimensions for the following building features: roof patio area, parapet height, bulkhead height, and distance between the roof patio and parapet.
4. The applicant was encouraged to investigate smaller and less tall pergola options that still meet their needs.

Following the meeting, the applicant provided the requested photos and the following dimensions:

- Rooftop patio width: 17' 10"
- Rooftop patio length: 15' 10"
- Rooftop patio area: 255.7 sq. ft.
- Parapet height: 42"
- Distance of parapet to patio: 13"
- Bulkhead height at door: 8' 2"

The applicant stated that they did search for alternative pergolas, but the proposed option is the only model that features a louvered roof while also only needing assembly.

In addition to these materials, the applicant provided several photos exhibiting examples of other rooftop pergola or canopy structures within the Shaker Square district and throughout the City. These photos are included in the meeting packet.

<u>Landmark Commission Design Guidelines and Precedent</u>

The Shaker Heights Landmark Commission Design Guidelines state:

"New additions, exterior alterations, or related new construction shall not destroy historic materials that characterize the property. The new work shall be differentiated from the old and shall be compatible

with the massing, size, scale, and architectural features to protect the historic integrity of the property and its environment."

The Landmark Commission has no official precedent for the review of a rooftop pergola structure. However, existing rooftop pergolas or similar structures exist on both the Shaker Courts and Moreland Courts condominium buildings, which are both located within the Shaker Square Historic District.

Architectural Board of Review (ABR)

The ABR discussed the structure after its August 3, 2020 meeting and suggested it be moved back as far as possible from the edge of the building to minimize the view of the structure from the ground.

The Building Department has indicated that a licensed design professional will need to certify the live and dead loads of the structure as it pertains to the building's roof. This will be required during the permit review process.

Zoning

Zoning regulations allow an accessory structure no more than 15 feet tall.

Staff Recommendation

Staff recommends APPROVAL of the Certificate of Appropriateness for the rooftop pergola with one condition:

1. The pergola's exterior finish must comply with the color deemed most appropriate by the Landmark Commission and Architectural Board of Review.

The ground view of the structure will be minimal compared to existing rooftop auxiliary structures within the Shaker Square Historic District. In addition, since the pergola will not be bolted to the rooftop, it is a temporary structure that can be removed at any time with no physical impact to this historic building.

During the August 26, 2020 preliminary review, the Landmark Commission discussed the color of the pergola. The proposed model comes stained Mocha Brown; however, several members suggested that the pergola may be less conspicuous if it were painted white to match the existing bulkhead and parapet trim. Staff would like the Landmark Commission and Architectural Board of Review to discuss color and finishing options.

Property Location:

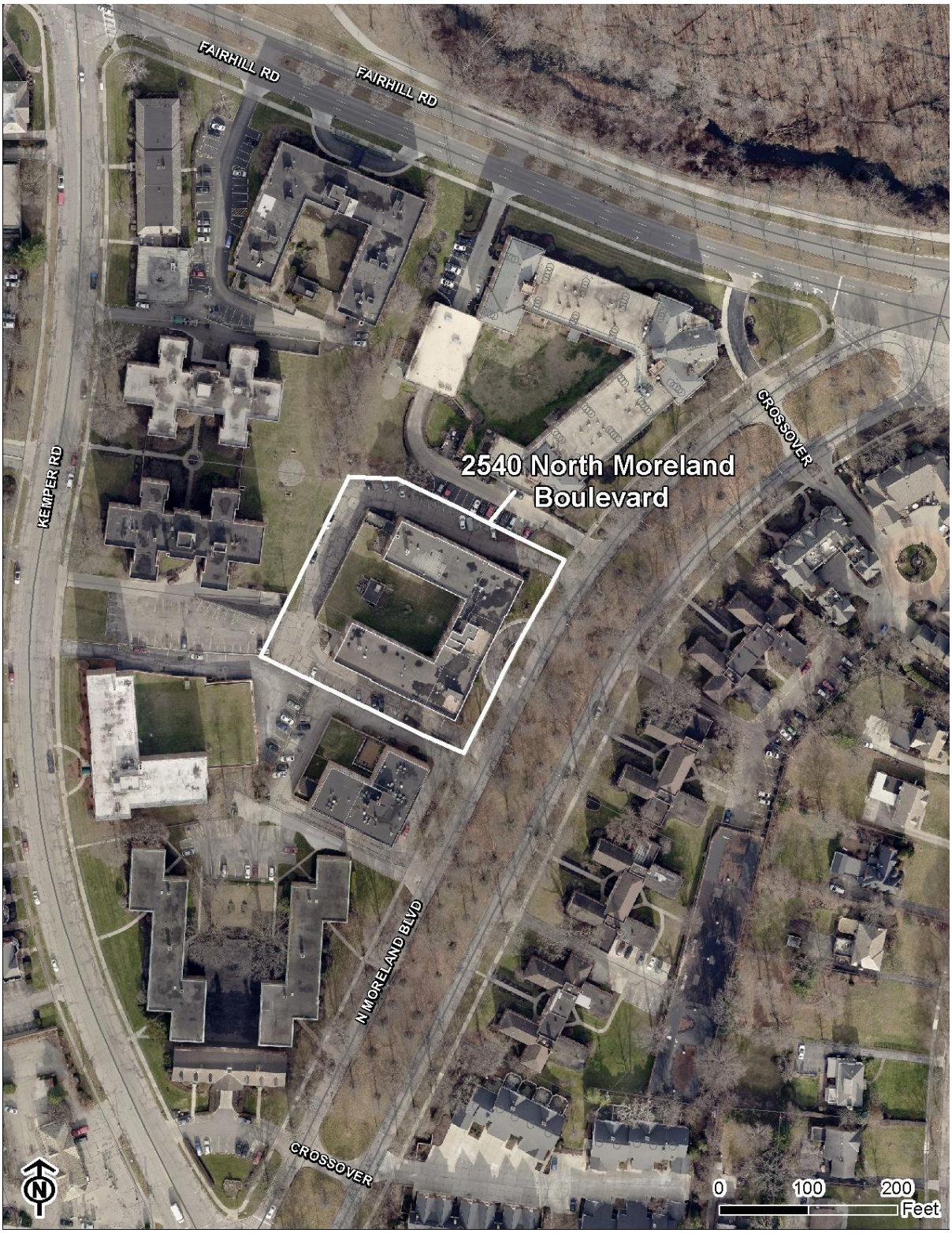

ARCHITECTURAL BOARD OF REVIEW APPLICATION

CITY OF SHAKER HEIGHTS | 3400 LEE ROAD | SHAKER HEIGHTS, OH 44120

A APPLICATION

Property Address: 2540 North Moreland Zip Code: 44120 Receipt No:

Property Owner: Capitol Property Management Phone No: 216 941 3057

Property Owner's Address (if different): 12424 Shaker Blvd

City: Cleve State: OH Zip:

Owner E-Mail Address: mlaubscher@cpm-ltd.com

Name of Applicant: Bruce Rose Phone No: 216 621 3407

Address of Applicant: 2540 N. Moreland #502 Fax No:

City: Shaker HTS State: OH Zip: 44120

Brief description of work to be done: I want to place a pergola on a rooftop patio. It will be free standing but anchored.

Square footage of addition:

Name of person(s) who will represent this submission before the board: Bruce Rose

Representative E-Mail Address: Bruerrose@gmail.com

PROJECT INFORMATION

INFORMATION ACCOMPANYING THIS APPLICATION:

- ☐ Site Plan
- ☐ Floor Plan(s)
- ☐ Foundation Plan(s)
- ☐ Elevation(s)
- ☐ Cross Section(s) & Construction Details
- ☒ Color Photographs
- ☒ Material Samples/Manufacturer's Literature
- ☐ Fee

PLANS SUBMITTED FOR:

- ☒ Initial Submission
- ☐ Resubmission
- ☐ Preliminary Review
- ☐ Staff Review

All submissions must be complete and accurate at the time of application. When plans are submitted, ABR staff will inform the applicant of the meeting date and time. Someone qualified to discuss the project must be present at the meeting. The Board will not consider any submission without a representative present.

Bruce Rose 7/21/20

SIGNATURE DATE

PLANNING DEPARTMENT STAFF REVIEW

☐ Approved

SIGNATURE

DATE

COMMENTS

PROPOSED PERGOLA

13’ x 11’ Cedar Room with Aluminum Louvered Roof

Item 1333257

★★★★★ 4.8 (10)

Your Price $2,999.99

Curbside Delivery Included

Features:
- Built with 100% FSC Certified Premium Cedar Lumber
- Louvered Roof to Control Sun/Shade Exposure
- Gutter System Around Roof

1

Add to Cart

Add to List

Arrives approximately 3 - 4 weeks from time of order.

Compare Product

Share Print

Product Details | **Specifications** | Shipping & Returns | Reviews

Feedback

Product Details

Attention: As the purchaser and/or installer of this product, you are advised to consult your local city, municipality and applicable HOA guidelines for guidance on building codes and/or zoning requirements for your area before purchase. This structure may require a permit.

Extend your outdoor living space with Yardistry’s Cedar and Aluminum Louvered Room. This outdoor room adds character to any area, creating the perfect setting for all your outdoor entertainment needs. Yardistry’s unique louvered roof design allows you to control the amount of sun or shade you receive. Open both sides of the louvered roof for full sun exposure, close both sides to provide full shade, or do a mix- the possibilities are endless. This room is also designed to provide protection from the rain when the louvers are closed. It includes a full gutter system around the roof and down spouts in two of the posts to direct water flow. Built with 100% FSC Certified cedar lumber and quality aluminum, the Cedar and Aluminum Room is designed to last. The illustrated step-by-step instruction and the helpful hints video will guide you through every step of the installation process. Yardistry’s Cedar and Aluminum Louvered Room is a multi-functional product that will add a sophisticated and modern look to your outdoor space.

Features:
- Built with 100% FSC Certified Premium Cedar Lumber
- Stunning White Aluminum Roof
- Finished in a beautiful Mocha Brown stain
- Unique Louvered roof allows you to control the sun/shade exposure
- Gutter system around the roof and down spouts in two of the posts provides protection from the rain

Dimensions:
- Overall Dimensions: 13’ 3 ½” x 11’ 1 ½” x 8’ 3”
- Base Dimensions (outside of posts): 13’ x 11’

Assembly:
- Product comes as a ready to assemble kit with all wood pre-cut, pre-drilled, and pre-stained and includes all hardware and metal components
- Online helpful hints assembly video available at www.yardistrystructures.com
- Simple step by step illustrated instructions are included to ensure ease of assembly
- Dedicated Customer Experience Team to help you with any assembly questions

Specifications

Brand	Yardistry
Shape	Rectangle

EXISTING CONDITIONS

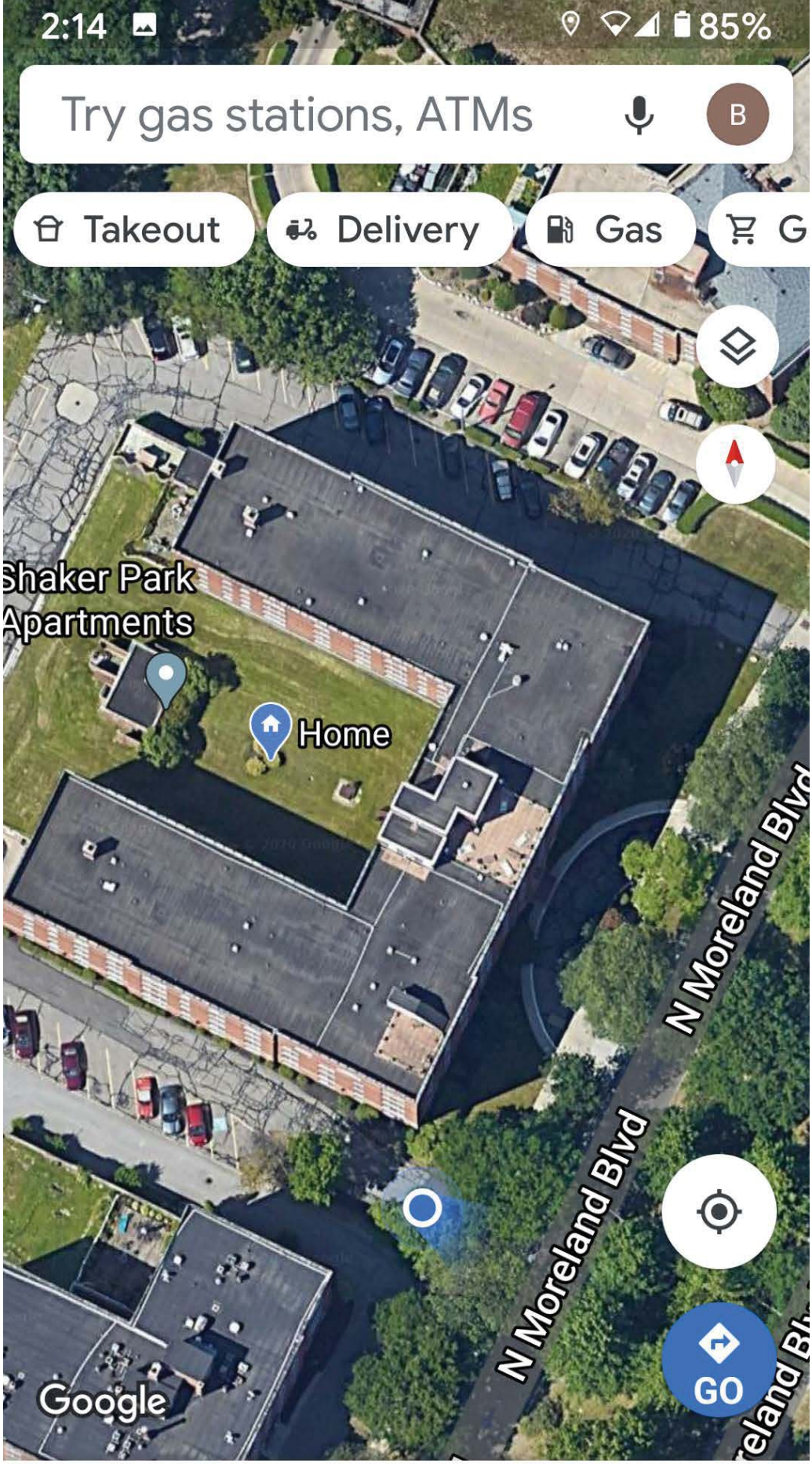

Explore Comm... Saved Contrib... Updates

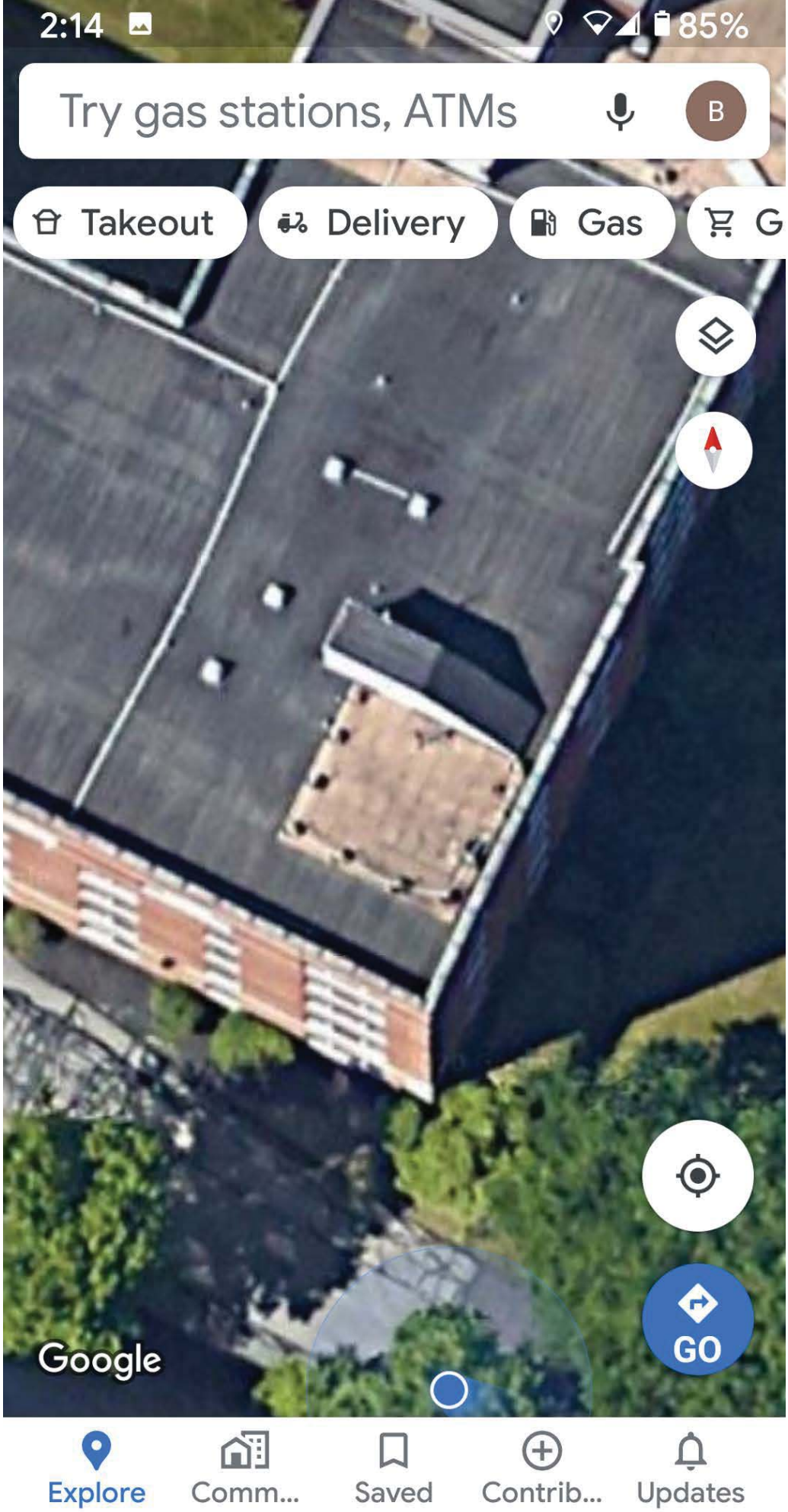
2:14
85%
Try gas stations, ATMs
B
Takeout
Delivery
Gas
G
Google
GO
Explore
Comm...
Saved
Contrib...
Updates

STREET VIEW REPRESENTATION

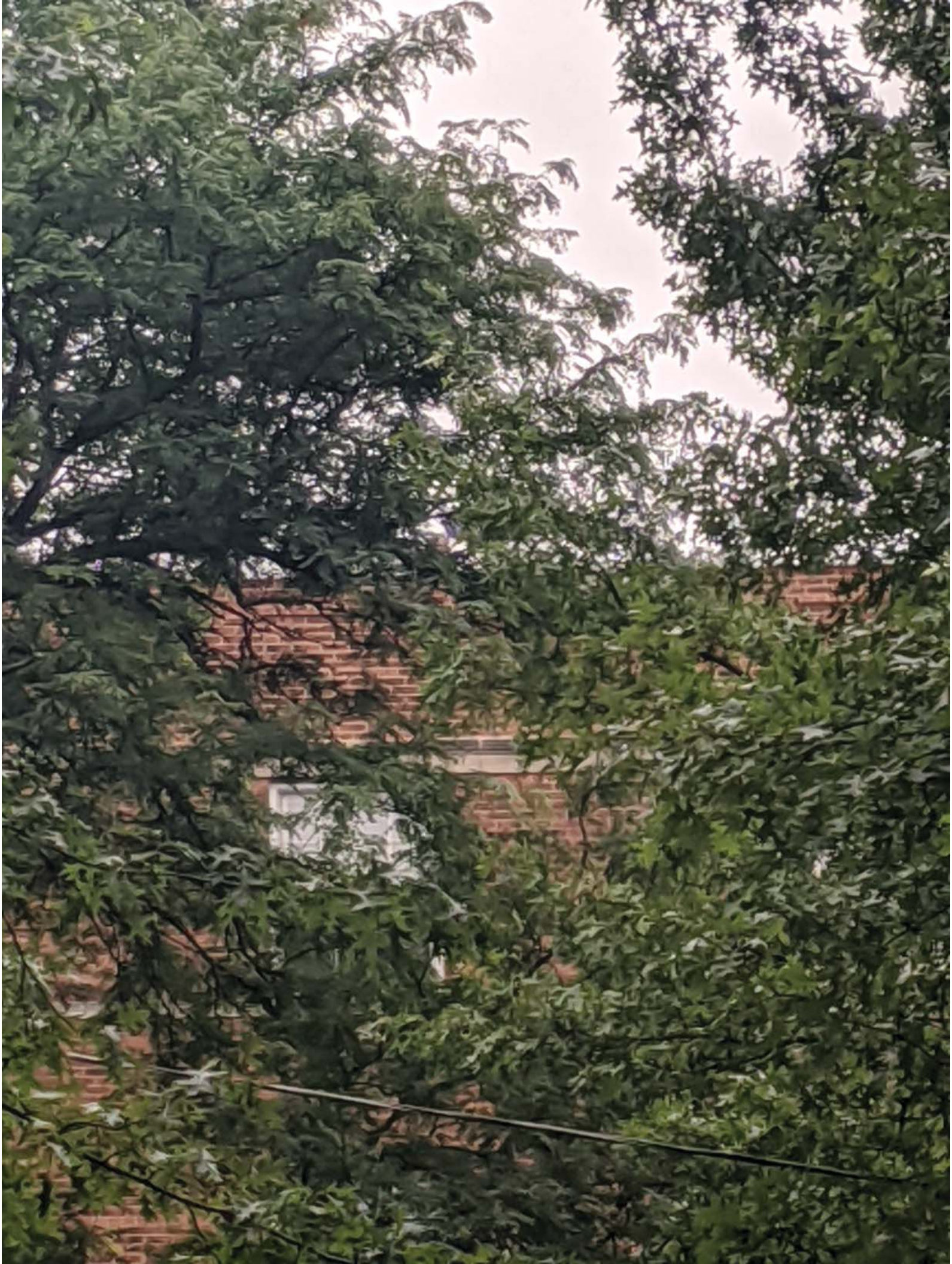

AUXILARY ROOFTOP STRUCTURE EXAMPLES

MORELAND COURTS (SEEN FROM SHAKER SQUARE)
13415 SHAKER BLVD

MORELAND COURTS (REAR)
13415 SHAKER BLVD

MORELAND COURTS (SEEN FROM SHAKER BLVD)
13415 SHAKER BLVD

MORELAND COURTS (REAR)
13415 SHAKER BLVD

MORELAND COURTS (REAR)
13415 SHAKER BLVD

SHAKER VILLAS
19901 VAN AKEN

BLAIR HOUSE
19601 VAN AKEN

SHAKER HEIGHTS

Memorandum

To: Members of the Landmark Commission
Members of the Architectural Board of Review

From: Cameron Roberts, Planner
Daniel Feinstein, Senior Planner

Date: September 18, 2020

Re: **Certificate of Appropriateness: 13165 Larchmere Boulevard (BP Gas Station)—Canopies.** Carleton Moore, contractor, CWM Services.

Meeting: September 23, 2020

13165 Larchmere (August 2020 Photo)

Background

The BP Gas Station located at 13165 Larchmere Boulevard was constructed in 1938; Standard Oil is noted as the architect and builder. It is located within the Shaker Square Historic District, which was established by ordinance in 1980. The property includes 4 double-sided fuel pumps, a retail store, and an accessory car wash structure.

The owner of the property proposes to install two canopy structures above the existing fuel pumps in order to provide shelter from the elements to patrons of the gas station. Photos of existing conditions, a site plan, detailed drawings, specifications, and a rendering of the canopy structures are included in the meeting packet.

The proposed canopies will be located on the southeastern corner of the site, with each canopy covering two of the existing fuel dispensers. Each canopy will be supported by two 12”x12” columns that are designed to match the column elements on the existing retail building.

The dimensions of each canopy will be 24 feet wide and 40 feet long, or 960 square feet in area. The proposed canopy size will require variance requests at a future Board of Zoning Appeals meeting as it does not meet setback requirements.

In terms of materials, the columns would be hollow steel sections wrapped in white, fluted PVC to add detail. The canopies would be constructed of white structural steel. White, PCV crown moulding will be added to the side of the canopies in order to add detail to the layered design. Each canopy will include 6 flat LED lens mounted to the bottom of the canopy deck for lighting. Exact dimensions and specifications for these design elements are included in the submitted plans.

The project would require removal of four existing light poles that currently illuminate for the fuel dispensers. One of the light poles located along the southern property line currently has an attached pole sign for displaying gas prices. The intent is for this sign to be reused by attaching it to the canopy’s column. The existing pole sign is 3 feet wide by 6 feet high, and it is 7 feet above grade.

Landmark Commission Design Guidelines and Precedent

The Shaker Heights Landmark Commission Design Guidelines state:

“New additions, exterior alterations, or related new construction shall not destroy historic materials that characterize the property. The new work shall be differentiated from the old and shall be compatible with the massing, size, scale, and architectural features to protect the historic integrity of the property and its environment.”

“Exterior materials for a new building should be of a high quality and should be consistent with materials used for other buildings in the neighborhood.”

The Landmark Commission has no official precedent for the review of similar canopy structures. There is also no precedent for the use of PVC or fiberglass material for exterior design elements. For residential projects, the Landmark Commission has historically discouraged the use of vinyl and similar plastic-based materials.

Architectural Board of Review (ABR)

The Architectural Board of Review reviewed the applicant’s original plans preliminarily after a meeting and had the following comments on those plans:

- They all agreed that the canopy structures appeared to be very high and advised that it to be lowered while still meeting the minimum height standards for trucks.

- They also all agreed that "corporate" architecture will be tough to get approved in Shaker and especially in this historic district.
- They recommended a canopy structure design that is more subtle and ties into some of the design elements of the existing building on the site.
- They recommended that the canopies be designed to minimize their robustness and be more sensitive to the historic context.
- They noted the lack of column detail and asked whether base or head detail could be added.
- They suggested playing off of the existing building by using white columns with detail for the structure, while using the entablature around the canopy edge.
- They recommended removal of the green band.

The submitted plans for this application reflect the applicant's attempt to address these preliminary design comments.

The ABR design guidelines provide the following guidance about alterations to commercial property: ***Storefront Alterations:*** Storefront alterations should respect the architectural character of the existing building in terms of materials, scale, proportion, and fenestration.

Zoning

The canopies are too close to the property lines and the building. The required setback of the canopy from property lines and to the building is a minimum of 12 feet per Section 1263.05. The canopies are closer to both Larchmere (4 ft.) and Kemper (9 ft.) property lines than allowed.

The Larchmere canopy is only 7 feet from the building and the Kemper canopy is 11 feet from the canopy.

The canopy locations will require variance requests at a future Board of Zoning Appeals meeting.

Staff Recommendation

Staff recommends CONTINUATION of this application in order to address the following design concerns.

Staff is concerned about the scale of the proposed canopies and their potential impact on the surrounding historic district. In particular, the canopy height and the overall canopy area. Staff suggests that the applicant investigate a smaller scale canopy option as it may be possible to reduce the size without impeding their function. The Landmark Commission and Architectural Board of Review are encouraged to discuss this topic.

Staff requests that the Landmark Commission and Architectural Board of Review discuss the proposed design and its relationship to both the existing building on-site and the surrounding historic district.

Property Location:

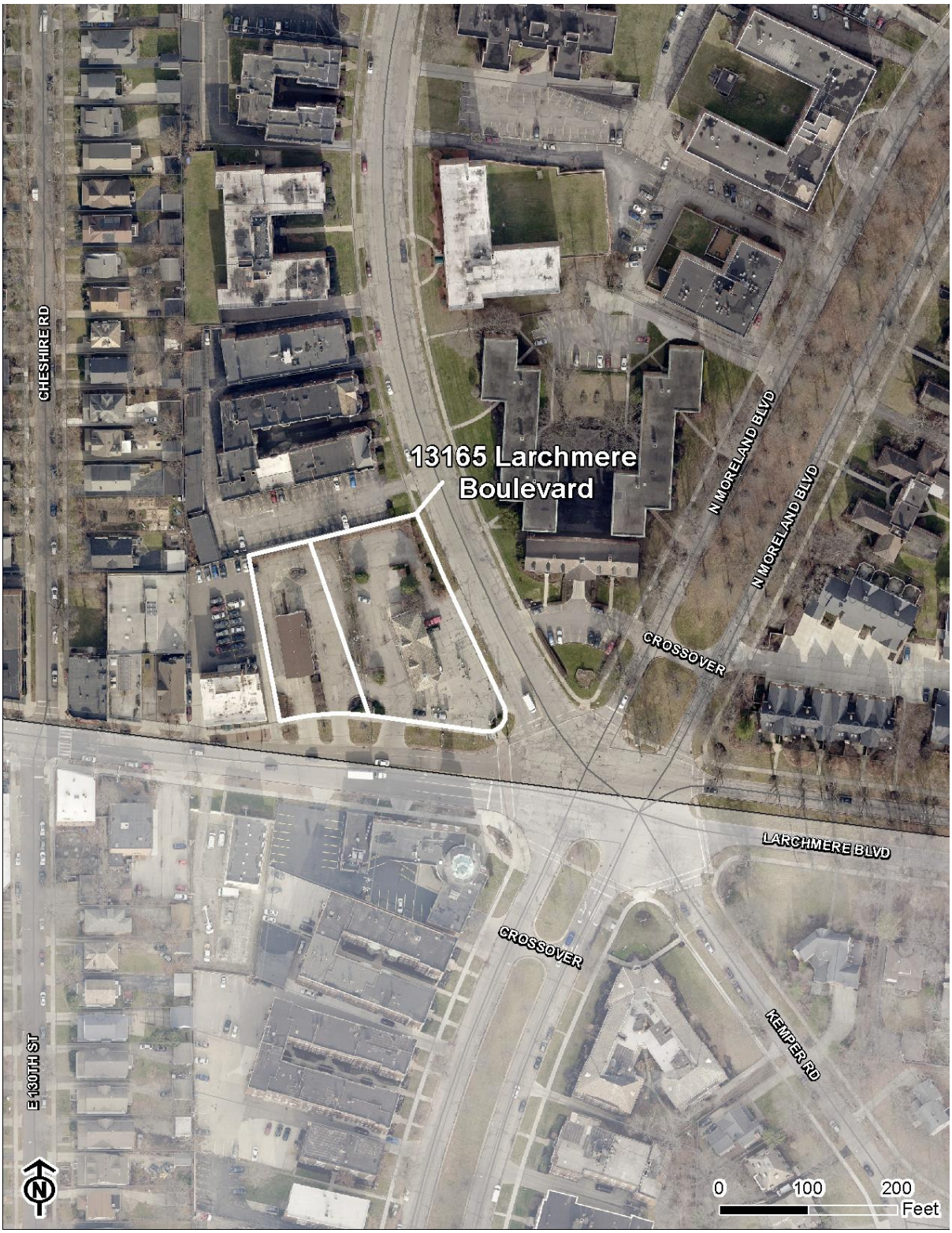

LANDMARK COMMISSION APPLICATION FORM

CITY OF SHAKER HEIGHTS | 3400 LEE ROAD | SHAKER HEIGHTS, OH 44120

A
APPLICATION

Property Address: 13165 LARCHMERE Receipt No: _____

Property Owner: AHMAD "TONY" SAMRA Phone No: (216) 333-3255

Property Owner's Address (if different): SAME

City: SHAKER HTS. State: OHIO Zip: _____

Name of Applicant: CARLETON MOORE! Phone No: (216) 272-7653

Address of Applicant: 3195 EAST 130 ST Fax No: (216) 831-6878

City: CLEVELAND State: OHIO Zip: 44120

Brief description of work to be done: TWO NEW CANOPIES ABOVE EXISTING FUEL PUMPS AT B.P. GAS STATION

Square footage of addition: _____

Name of person(s) who will represent this submission before the board: CARLETON MOORE!

E-Mail Address: CWMSERVICES2015@GMAIL.COM

PROJECT INFORMATION

INFORMATION ACCOMPANYING THIS APPLICATION:

- [x] Site Plan
- [ ] Floor Plan(s)
- [ ] Foundation Plan(s)
- [x] Elevation(s)
- [ ] Cross Section(s) & Construction Details
- [x] Color Photographs
- [ ] Material Samples/Manufacturer's Literature
- [ ] Fee

PLANS SUBMITTED FOR:

- [x] Initial Submission
- [ ] Resubmission
- [x] Preliminary Review
- [x] Staff Review

All submissions must be complete and accurate at the time of application. When plans are submitted, staff will inform the applicant of the meeting date and time. Someone qualified to discuss the project must be present at the meeting. The Board will not consider any submission without a representative present.

SIGNATURE CARLETON MOORE! DATE 7-29-2020

FOR INTERNAL USE ONLY

- [ ] Check this box to verify that a pre-application meeting with staff for technical assistance and review of the Landmark Commission Application Procedures document has been completed. The application will not be considered complete without a pre-application meeting.

ZONING REVIEW	ARCHITECTURAL BOARD OF REVIEW	LANDMARK COMMISSION
☐ Approved ☐ Not Approved ☐ Not Req'd	☐ Approved ☐ Not Approved ☐ Not Req'd	☐ Approved ☐ Not Approved ☐ Not Req'd
SIGNATURE DATE	SIGNATURE DATE	SIGNATURE DATE
COMMENTS	COMMENTS	COMMENTS

EXISTING CONDITIONS

Soft Cloth
Car Wash
Invigorate
Home Style Ice
Home Style Ice
Invigorate

car wash
regular
2.09
AIR
PLAY
OFF
HERE
ICE

car wash
regular
2.09
BP gasoline
invigorate
OPEN
Invigorate
Invigorate

SELF

SITE PLAN & DRAWINGS

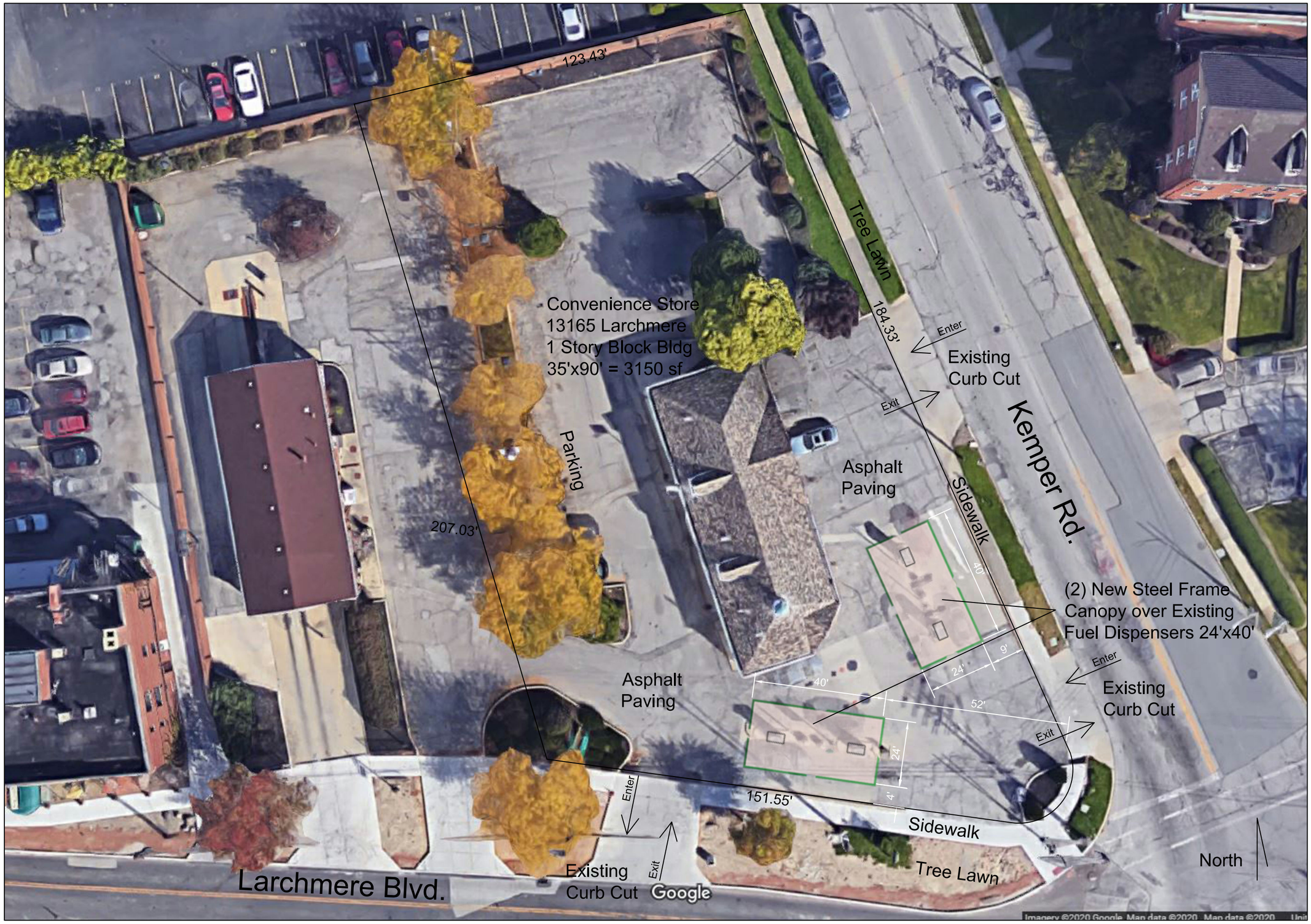

SITE PLAN

CONVENIENCE STORE WITH
NEW FUELING CANOPIES

13165 LARCHMERE BLVD
SHAKER HEIGHTS, OHIO

Soft Cloth
Car Wash

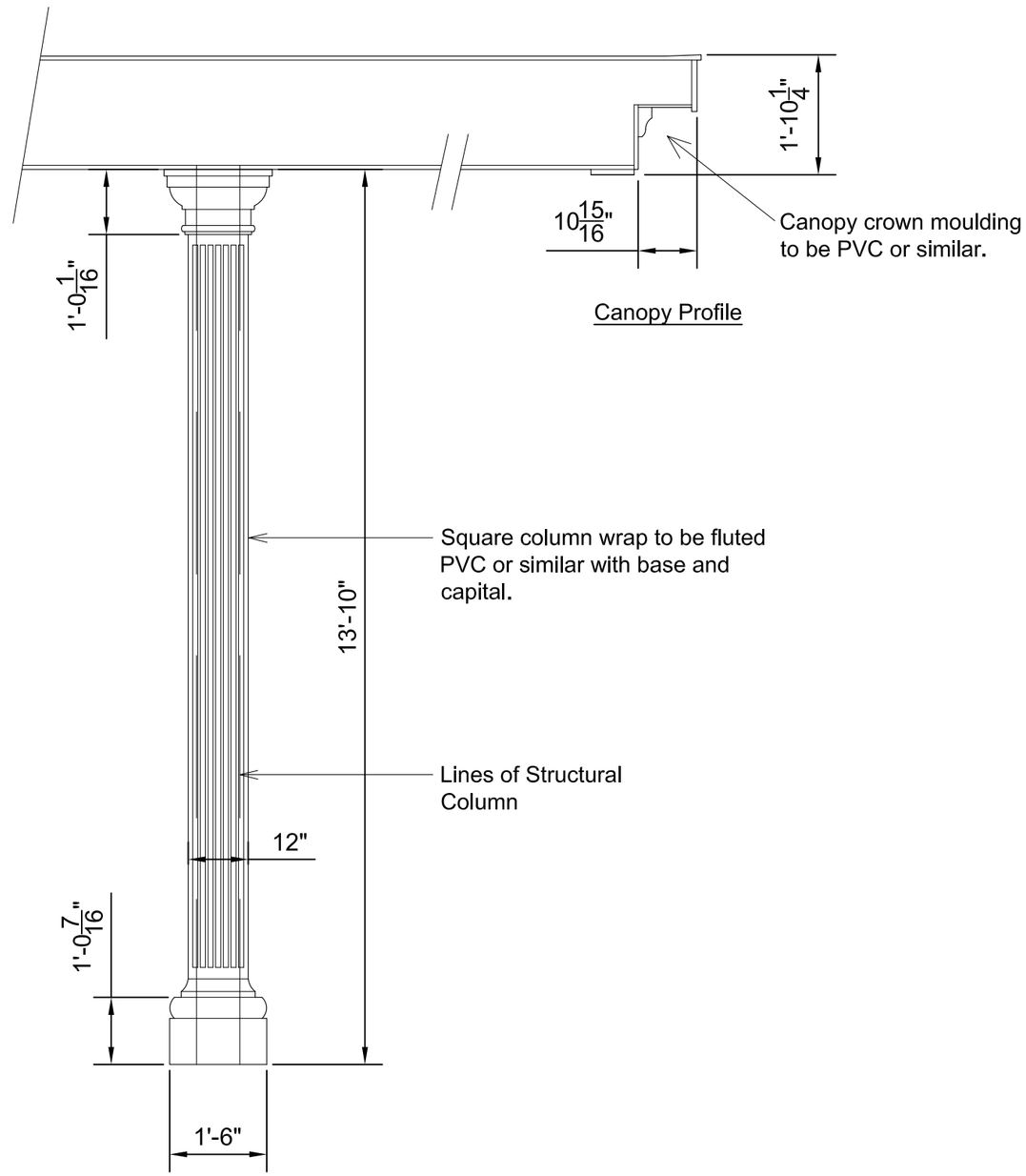

CANOPY DETAILS

CONVENIENCE STORE WITH
NEW FUELING CANOPIES

13165 LARCHMERE BLVD
SHAKER HEIGHTS, OHIO

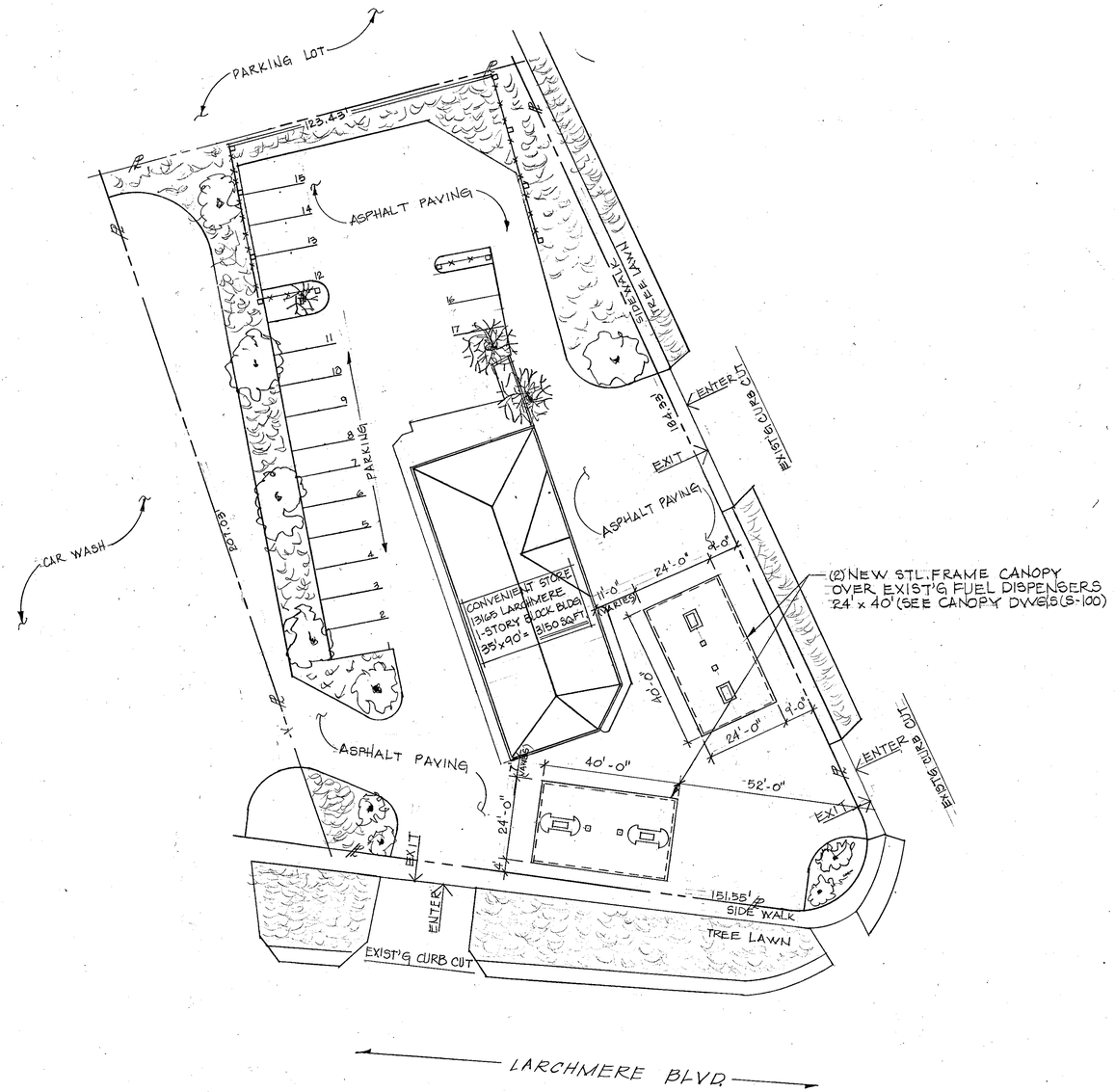

SITE PLAN
SCALE: 1" = 20'

NORTH
1
S-1

REVISIONS	BY

ARCHITECTURE – DEVELOPMENT
+
CONSULTANTS
(216)831-6878

BP GAS STATION
13165 LARCHMERE BLVD.

CANOPY SITE PLAN

Date	
Scale	
Drawn	
Job	
Sheet	
Of	Sheets

24 X 36 CLEARPRINT®

ALL STRUCTURAL STEEL COATED W/ RED OXIDE PRIMER

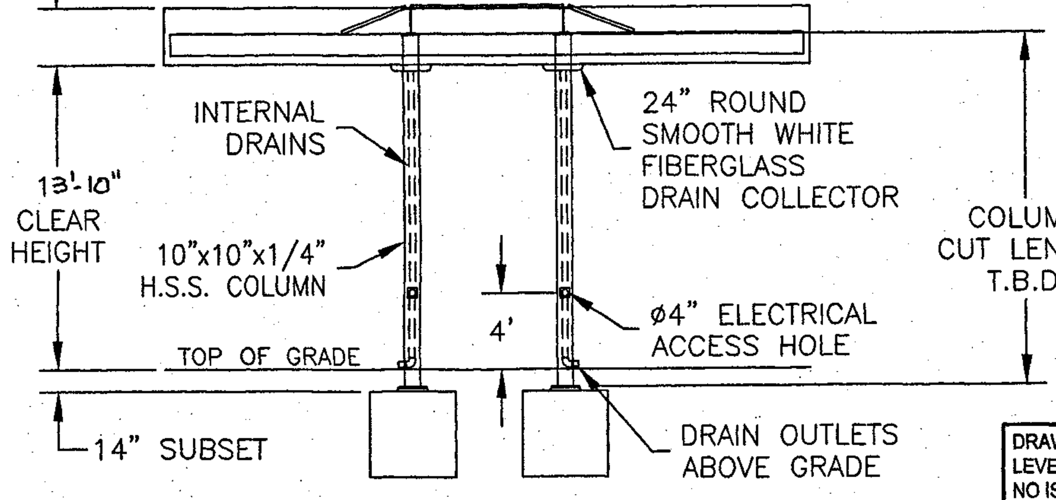

SIDE ELEVATION VIEW

DRAWN WITH GRADE LEVEL AND TOPS OF FOOTERS LEVEL WITH EACH OTHER. GRADE IS THE DRIVE SURFACE. NO ISLAND OR CURB IS CONSIDERED WHEN DETERMINING CLEAR HEIGHT OR SUBSET. IT IS THE CUSTOMER'S RESPONSIBILITY TO INFORM S.C.C. OF THE FINAL AS-BUILT ELEVATIONS OF GRADE AND FOOTER TOPS PRIOR TO THE FABRICATION OF COLUMNS.

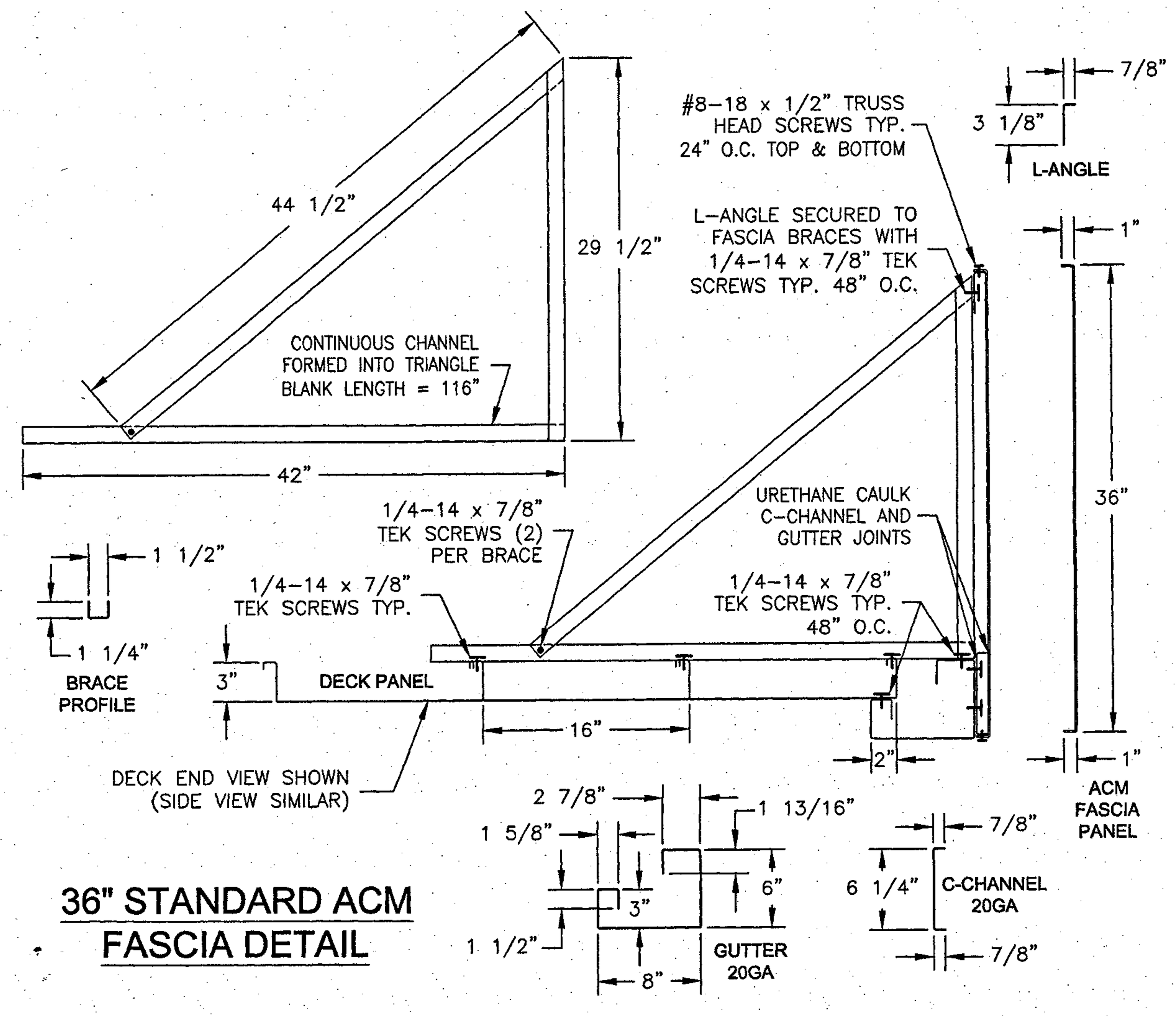

36" STANDARD ACM FASCIA DETAIL

O/O DIMENSIONS OF THE GUTTER AND FASCIA BRACES ARE 23'-10" x 33'-10"

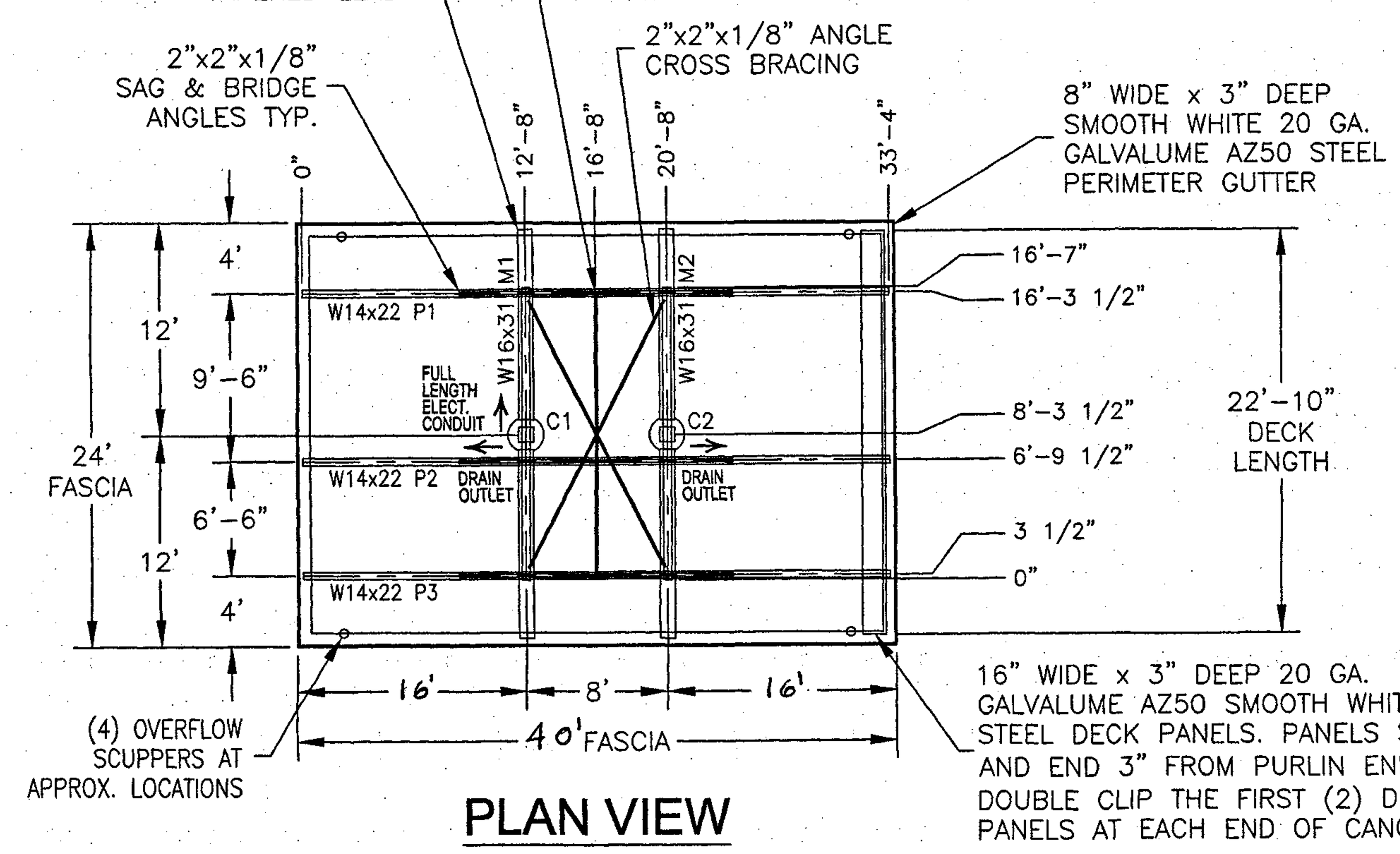

PLAN VIEW

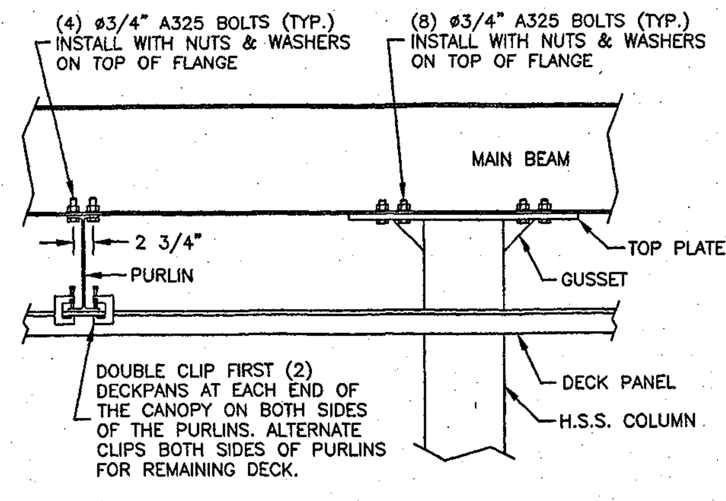

STRUCTURAL CONNECTION DETAIL

NOT TO SCALE

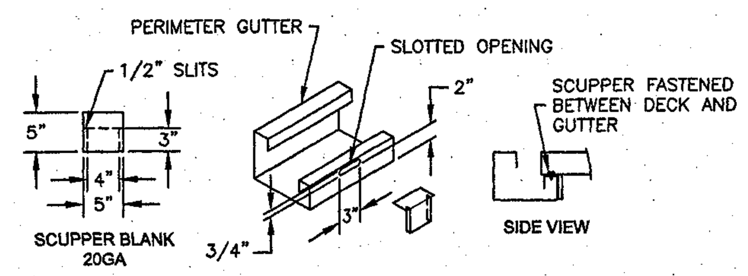

OVERFLOW SCUPPER

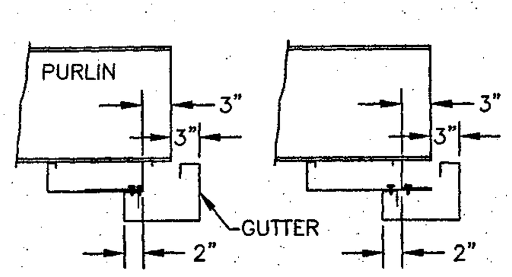

FINISH PAN OPTIONS

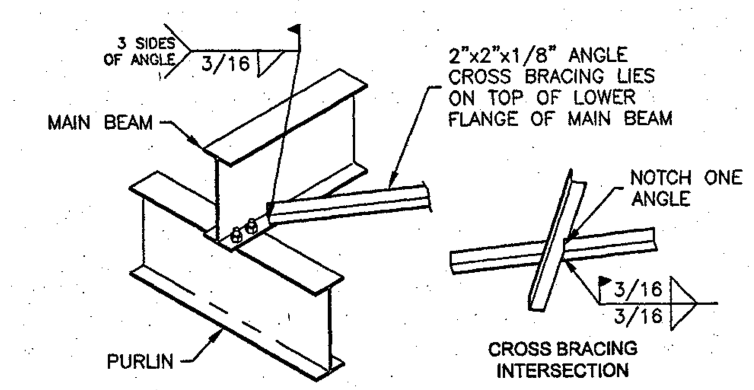

CROSS BRACING DETAIL

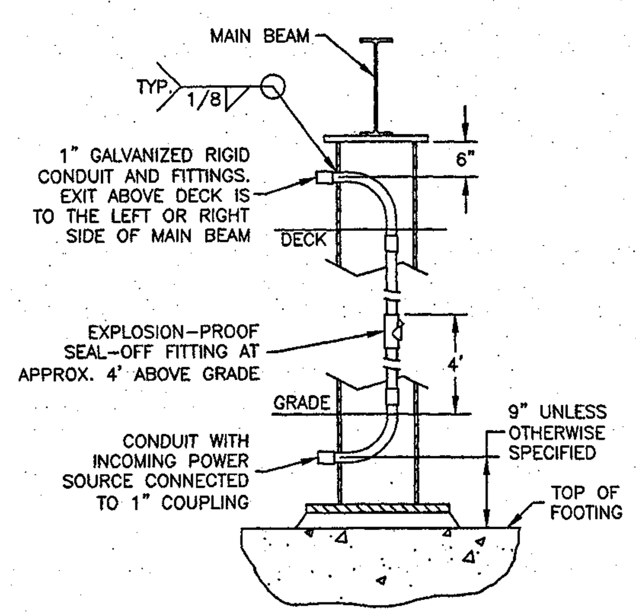

FULL-LENGTH ELECTRICAL CONDUIT

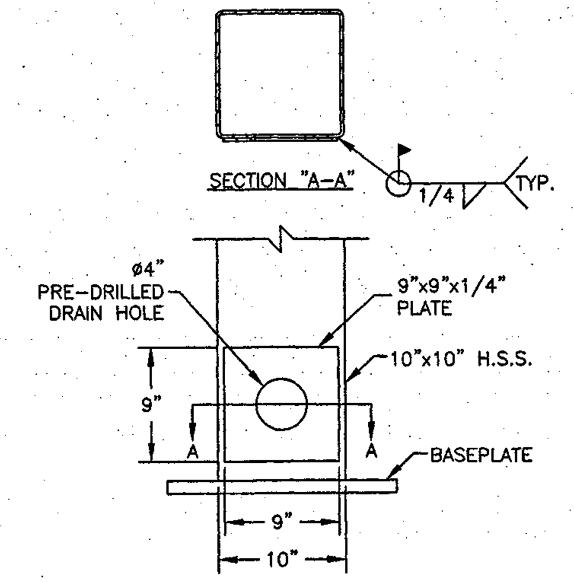

REINFORCEMENT PLATE DETAIL

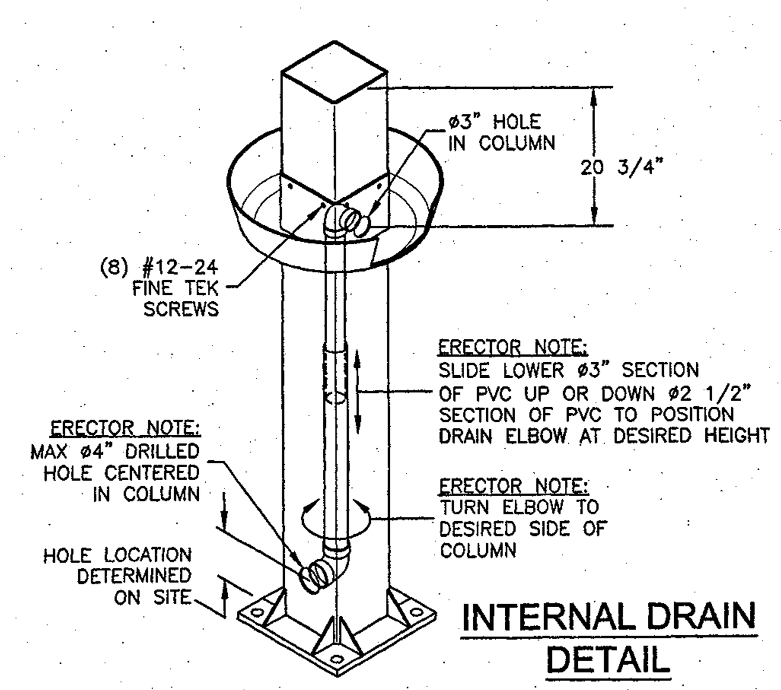

INTERNAL DRAIN DETAIL

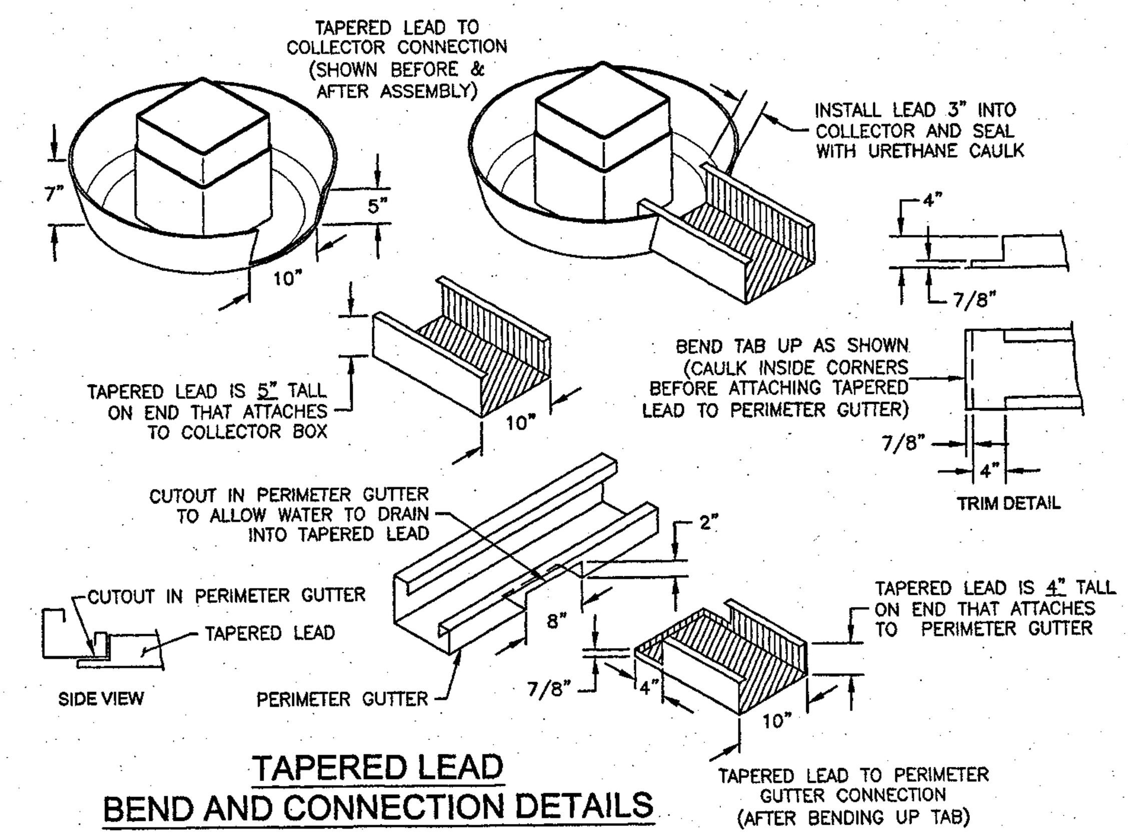

TAPERED LEAD BEND AND CONNECTION DETAILS

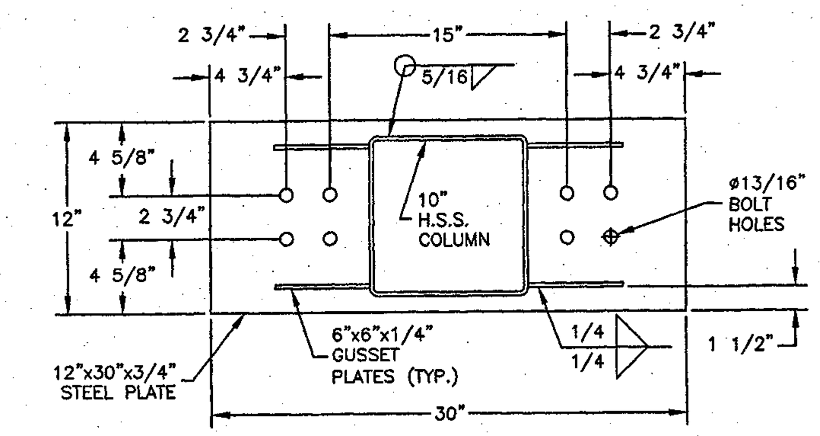

TOP PLATE DETAIL

NOTE: IF BOLT HOLES DO NOT LINE UP, A 1/8" FILLET WELD OF ANGLE TO TOP OF PURLIN IS PERMISSIBLE

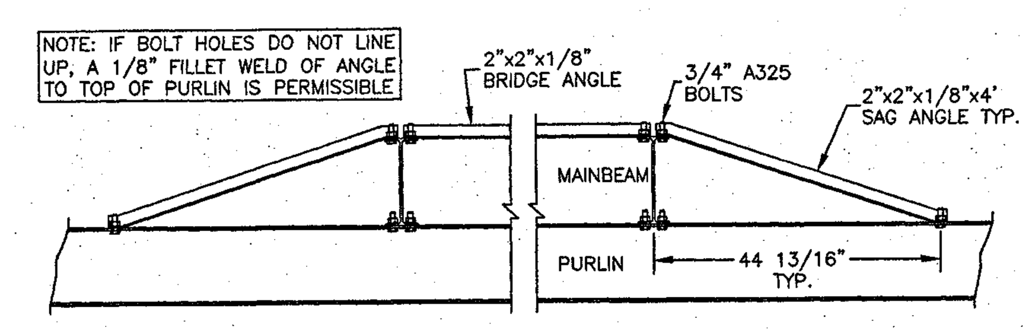

BRIDGE ANGLE DETAIL

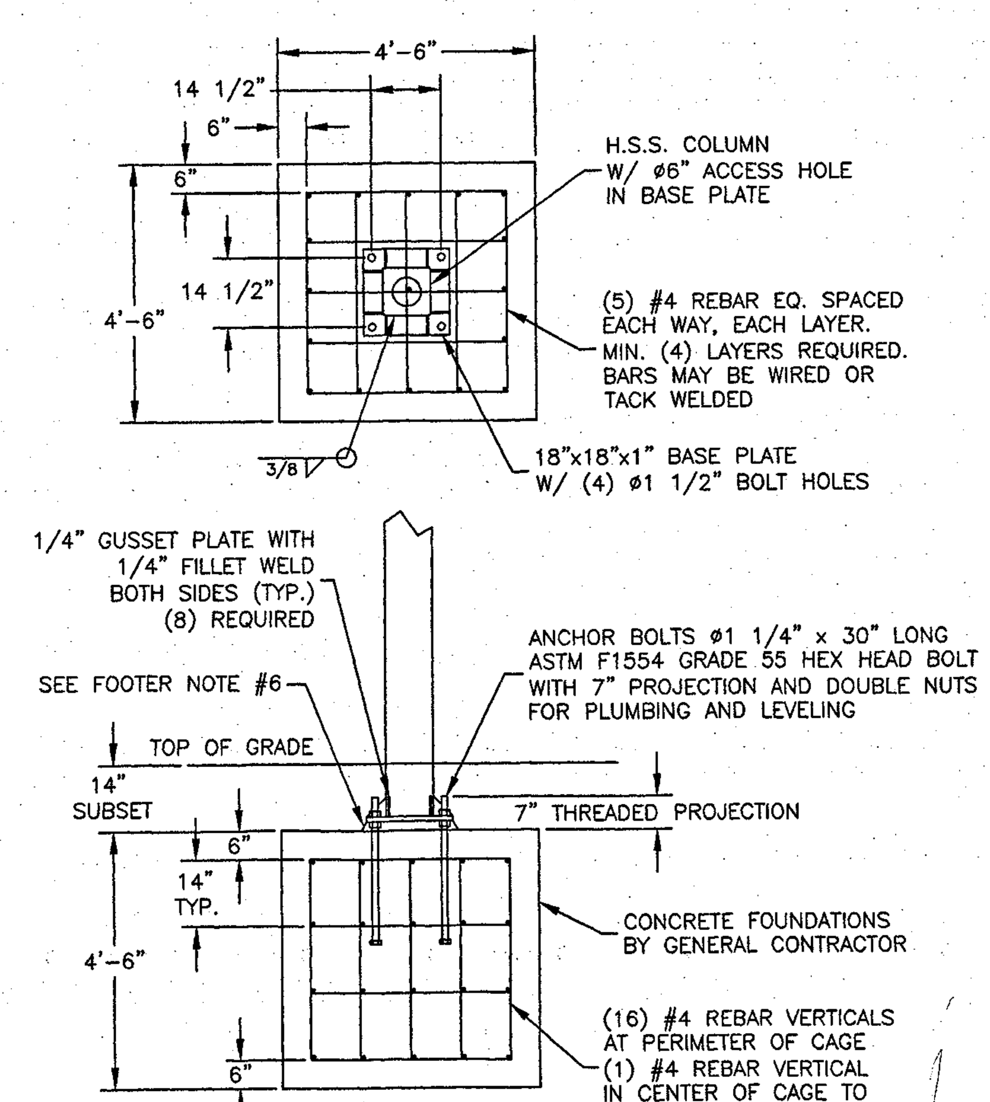

FOOTER DETAIL

GENERAL NOTES:

1. THE STRUCTURAL STEEL IS DESIGNED IN ACCORDANCE WITH AISC STEEL CONSTRUCTION MANUAL, 14th EDITION, WHICH CORRESPONDS TO THE 2010 AISC SPECIFICATION (ANSI/AISC 360-10).
2. ALL CONTRACTOR'S WORK SHALL BE PERFORMED IN A MANNER TO FOLLOW ALL STATE AND LOCAL CODES AND REGULATIONS.
3. ALL STRUCTURAL STEEL SHALL BE AS FOLLOWS:
W SHAPES: ASTM A992 - 50 ksi
STRUCTURAL TUBING: ASTM A500 GRADE B&C - 46 ksi
16" ROUND: A500 GRADE B&C - 42 ksi.
ALL CAP PLATES AND BASE PLATES: A572 GRADE 50.
MISCELLANEOUS PLATE MATERIAL: A36 (IE. WEB SPLICE PLATES, GUSSETS, ETC.)
4. DECK PANELS TO MEET ASTM A792 GRADE 50 WITH A MINIMUM YIELD STRENGTH OF 50 ksi.
5. ALL WASHERS AND NUTS TO MEET ASTM F436 AND ASTM A325 RESPECTIVELY.
6. ALL WELDING, UNLESS NOTED OTHERWISE, SHALL BE PERFORMED IN THE SHOP PRIOR TO SHIPMENT. ALL FIELD WELDS MUST BE PERFORMED BY CERTIFIED WELDERS. ALL WELDING TO COMPLY WITH AWS D1.1 "STRUCTURAL WELDING CODE-STEEL" WITH E70XX ELECTRODES.
7. ALL STRUCTURAL STEEL CONNECTORS AND SPLICES ARE TO BE PRIMED AFTER ERECTION.

BOLT NOTES:

ALL A325 AND A490 BOLTED CONNECTIONS SHALL BE INSTALLED WITH "TURN-OF-NUT" METHOD, AS DEFINED IN SECTION 8.1 OF THE RCSC SPECIFICATION FOR STRUCTURAL JOINTS USING ASTM A325 OR A490 H.S. BOLTS, DEC. 31, 2009, CONTAINED IN PART 16, SPECIFICATIONS AND CODES OF THE AISC STEEL CONSTRUCTION MANUAL, 14th EDITION.

SECTION 8.2.1; TABLE 8.2, TURN-OF-NUT PRETENSIONING:
A. ALL BOLTS SHALL BE BROUGHT TO A SNUG TIGHTNESS, DEFINED AS THE TIGHTNESS ATTAINED BY THE FULL EFFORT OF A MAN USING AN ORDINARY SPUD WRENCH.
B. ALL BOLTS IN CONNECTION SHALL THEN BE TIGHTENED ADDITIONALLY BY A NUT OR BOLT ROTATION (THERE SHALL BE NO ROTATION OF THE PART NOT TURNED BY THE WRENCH) OF THE FOLLOWING, PER TABLE 8.2:
BOLT LENGTH UP TO AND INCLUDING 4 DIAMETERS - 1/3 TURN (BOTH FACES NORMAL TO BOLT AXIS)
BOLT LENGTH OVER 4 AND LESS THAN 8 DIAMETERS - 1/2 TURN (BOTH FACES NORMAL TO BOLT AXIS)

FOOTER NOTES:

1. MAINTAIN TOPS OF ALL FOOTERS AT THE SAME ELEVATION +/- 1/4" UNLESS OTHERWISE NOTED.
2. CONCRETE FOUNDATIONS, BY GENERAL CONTRACTOR, SHALL HAVE A MINIMUM COMPRESSIVE STRENGTH OF 3,000 PSI AT 28 DAYS. THE CONCRETE MIX SHALL HAVE A MINIMUM SLUMP OF 3" AND A MAXIMUM SLUMP OF 6".
3. COLUMNS ARE TO BE LOCATED IN THE CENTER OF THE FOUNDATION WITH THE COLUMNS CENTER TO CENTER SPACING CONFIRMED USING A TRANSIT. ANCHOR BOLT SPACINGS ARE TO BE VERIFIED BEFORE CONCRETE PLACEMENT.
4. STEEL REINFORCEMENT TO MEET ASTM A615 GRADE 40 FOR #4 REBAR & GRADE 60 FOR #5 REBAR OR GREATER.
5. THE FOUNDATION DESIGN INCORPORATES A SOIL BEARING PRESSURE OF 2,000 PSF AND A PASSIVE SOIL PRESSURE OF 200 PSF/FT. THE FOOTING IS RECOMMENDED TO BE BACKFILLED USING ENGINEERED FILL IN 8" LAYERS TO 95% COMPACTED. CONSULT YOUR LOCAL SOIL ENGINEER FOR SITE-SPECIFIC CONDITIONS. NO BURIED TANKS OR OTHER STRUCTURES MAY BE LOCATED SUCH THAT THEY HINDER THE PROPER FUNCTION AND INTEGRITY OF THE FOOTER. IF THE SITE CONTAINS QUESTIONABLE SOIL CONDITIONS, SOIL BORINGS MUST BE PERFORMED WITH A COPY OF THE FINAL REPORT FORWARDED TO THE ENGINEER OF RECORD FOR FINAL DESIGN OF FOUNDATIONS PRIOR TO CONSTRUCTION.
6. A NON-SHRINK HIGH STRENGTH GROUT IN ACCORDANCE WITH ASTM C827 SHALL BE USED BETWEEN THE BASE PLATE AND FOOTING WITH A THICKNESS RANGE OF 1" TO 2". GROUT TO BE INSTALLED BY FOUNDATION CONTRACTOR. USE TAMMS GROUT SUPREME OR APPROVED EQUAL.

ERECTION NOTES:

1. ELEVATION OF LEVELING MUST BE SET WITH A TRANSIT LEVEL DURING CONSTRUCTION.
2. ALL STEEL (IE; COLUMNS, PURLINS, MAIN BEAMS) MUST BE CHECKED CLOSELY TO VERIFY THAT IT IS PLUMB, SQUARE AND LEVEL AFTER IT HAS BEEN ERECTED AND BEFORE FINAL ADJUSTMENT.
3. ALL ASTM A325 BOLTS SHALL BE INSTALLED PER THE 2009 RCSC SPECIFICATION FOR STRUCTURAL JOINTS USING ASTM A325 OR A490 BOLTS.
4. ALL BRACING, (SAGS, LATERALS, ETC.) MUST BE INSTALLED PRIOR TO THE INSTALLATION OF THE DECK PANELS.

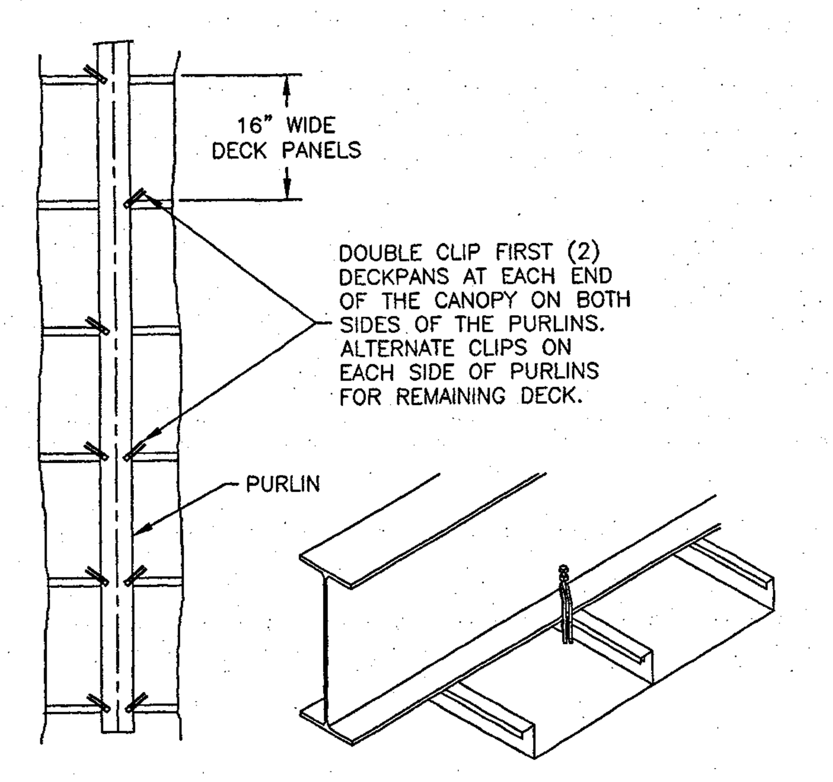

DECKCLIP ATTACHMENT DETAIL

SCALE: NOT SHOWN

Superior Canopy CORPORATION

2435 E. Bellefontaine Road
Hamilton, IN 46742
(260) 488-4065

DISTRIBUTOR:	N & N SERVICES		
SIZE:	24'x34'	# COLUMNS:	2
DRAWN BY:	SS		

STATE OF OHIO — JERMEY L. BOWERS — PE-75179 — REGISTERED PROFESSIONAL ENGINEER — 08/25/2019

Bowers Engineering Services — BES — Auburn, Indiana — Professional Engineer

REVISIONS

DESIGN LOAD CRITERIA

CODE: 2017 OH STATE BLDG CODE

1603.1.1 FLOOR LIVE LOAD: N/A
1603.1.2 ROOF LIVE LOAD: 20 PSF
1603.1.3 ROOF SNOW LOAD:
Pg= 30 PSF
Pf= 25.2 PSF
Ce= 1.0
I= 1.0
Ct= 1.2
1603.1.4 WIND LOAD:
V(3 SEC. GUST)= 115 MPH
I= 1.0
EXPOSURE= C
1603.1.5 EARTHQUAKE DESIGN DATA:
Sds= 0.184
Sd1= 0.092
SITE CLASS= D
SEISMIC FORCE-RESISTING SYSTEM= INVERTED PENDULUM
ANALYSIS PROCEDURE= EQUIVALENT LATERAL FORCE
CONSTRUCTION TYPE: TYPE IIB
USE GROUP: MERCANTILE GROUP M
BASE SHEAR V= 0.35 KIPS/COLUMN

SITE ADDRESS:

MARATHON
5075 LEE ROAD
MAPLE HEIGHTS, OH
44137

SCALE:	1/8" = 1'-0" U.N.O.	JOB #	C-19-3028
DATE:	06-25-2019	QUOTE #	21385-BMQ-19

TITLE:

CANOPY PLAN & ELEVATIONS

S-100.00

LIGHTING SPECIFICATIONS

CPY Series - Version B

CPY250® LED Canopy/Soffit Luminaire

Product Description

The CPY250® LED Canopy/Soffit Luminaire has an extremely thin profile constructed of rugged cast aluminum. It can be surface mounted easily from below the canopy deck and can be pendant mounted. Direct imaging of the LEDs is eliminated with a highly efficient patterned flat or 0.91" (23mm) drop glass lens.

Applications: Petroleum canopies, CNG fueling stations, soffits

Performance Summary

Assembled in the U.S.A. of U.S. and imported parts

Initial Delivered Lumens: Up to 20,080

Efficacy: Up to 151 LPW

CRI: Minimum 70 CRI

CCT: 3000K (+/- 300K), 4000K (+/- 300K), 5700K (+/- 500K)

Limited Warranty[1]: 10 years on luminaire/10 years on Colorfast DeltaGuard® finish

IP66 Rated (Direct Mount only)

Class I, Division 2 Hazardous Location for select models

[1] See http://lighting.cree.com/warranty for warranty terms

DM Mount

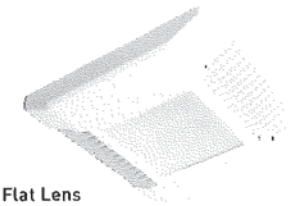

Flat Lens

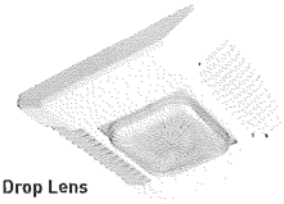

Drop Lens

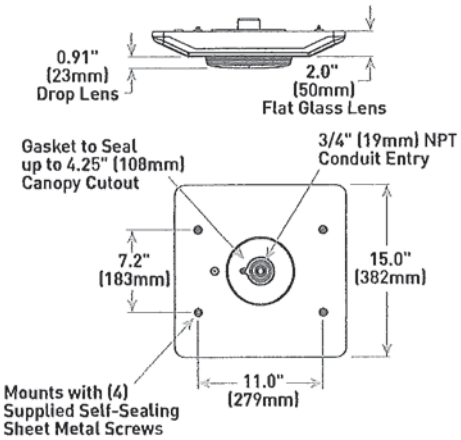

Weight
12.5 lbs. (5.7kg)

Accessories

Field-Installed

Direct Mount Luminaires

Canopy Upgrade Kits (18 ga. steel)

XA-BXCCMW – for use with Jet-Philips, 21.60" (549mm) square
XA-BXCCNW – for use with Elsco Franciscan, 22.06" (560mm) square
XA-BXCCPW – for use with LSI Dakota or Masters, 22.50" (572mm) square
XA-BXCCQW – for use with Whiteway Riviera or Rig-A-Lite, 20.60" (523mm) square
XA-BXCCRW – for use with Elsco Merrit, 18.06" (459mm) square
XA-BXCCSW – for use with LSI Richmond or Whiteway Civic, 23.00" (584mm) L x 13.00" (330mm) W

Direct Mount Junction Box/Stem Kit

XA-BXCCJBOX – 6.0" (152mm) H x 3/4" (19mm) NPT Stem
- Watertight
- Rated for feed through 8 (4 in, 4 out) #12 AWC conductors

Direct Mount Beauty Plates

XA-BXCCBPW – 26.17" (665mm) Beauty Plate Only (18 ga. steel)
XA-BXCCBPB12W – 26.17" (665mm) Beauty Plate (18 ga. steel) w/12" (305mm) Backer Plate (16 ga. steel)
- For use in canopies where deck opening is larger than what is required for mounting the CPY250 luminaire. Maximum deck opening 10.75" x 15" (183mm x 375mm)

XA-BXCCBPB16W – 26.17" (665mm) Beauty Plate (18 ga. steel) w/16" (406mm) Backer Plate (16 ga. steel)
- For use in canopies where deck opening is larger than what is required for mounting the CPY250 luminaire. Maximum deck opening 12" x 15" (305mm x 375mm)

Pendant Mount Luminaires

Pendant Mount Kits

XA-PS12KIT* – 5" (127mm) pendant
XA-PS18KIT* – 11" (279mm) pendant
XA-PS22KIT* – 15" (381mm) pendant
- Includes two conduit fittings and 3/4-14 NPT pipe threaded on two ends

Hand-Held Remote

XA-SENSREM
- For successful implementation of the programmable multi-level option, a minimum of one hand-held remote is required

* Must specify color

Ordering Information

Example: CPY250-B-DM-D-A-UL-SV

CPY250	B							
Product	**Version**	**Mounting**	**Optic**	**Input Power Designator**	**Voltage**	**Color Options**	**CCT**	**Options**
CPY250	B	**DM** Direct **HC** Hook & Cord **PD** Pendant	**D** 0.91" (23mm) Drop Lens **F** Flat Lens	**A** 60W **B** 96W **C** 31W **E** 145W **F** 85W	**UL** Universal 120-277V **UH** Universal 347-480V - Available with B, E & F input power designators only **34*** 347V - A & C input power designators only **48*** 480V - A & C input power designators only	**BK** Black **BZ** Bronze **SV** Silver **WH** White	**30K** 3000K **40K** 4000K **57K** 5700K	**DIM 0-10V Dimming** - Control by others - Refer to Dimming spec sheet for details - Can't exceed wattage of specified Input Power Designator **HZ Class I, Div. 2 Hazardous Location Certification** - Available with DM and PD mounts only - Not available with DIM, K, or PML options - A & C input power designators available in UL voltage only **K NSF 2 Certification** - Luminaires include NSF certification mark - Available with the DM mount only - Not available with the HZ or PML options **PML Programmable Multi-Level** - Available with UL voltage only - Refer to PML spec sheet for details

* 347 and 480V with A & C input power designators utilize a magnetic step-down transformer. For input power for 347 and 480V, refer to the Electrical Data table

CPY250® LED Canopy/Soffit Luminaire - Version B

Product Specifications

CONSTRUCTION & MATERIALS

- Slim, low profile design
- Easy mounting and servicing from below the deck
- Luminaire housing is constructed of rugged cast aluminum with integral heat sink specifically designed for LED
- Flat lens is 0.125" tempered Solite® glass
- Drop lens is 0.157" molded borosilicate glass
- Direct mount is suitable for use in single or double skin canopies with a minimum 4.0" (102mm) wide panels and a minimum 22 gauge, 0.030" (0.7mm) canopy thickness
- Direct mount luminaire mounts directly to the canopy deck with the drilling of a single 2" to 4" (51mm to 102mm) round hole, is secured in place with self-sealing screws that provide a weathertight seal and includes 3/4" (19mm) conduit entry for direct wire feed
- Hook and cord mount includes a 3' (0.91m) cord out of the luminaire and is intended to hang from the single hook
- Standard pendant mount includes a mounting bracket and a J-Box for customer wiring and is intended to be mounted by 3/4 IP pendant (by others)
- Hazardous location pendant mount has a threaded hub which accepts 3/4" NPT conduit (by others) and secures with a 1/4"-20 set screw
- Exclusive Colorfast DeltaGuard® finish features an E-Coat epoxy primer with an ultra-durable powder topcoat, providing excellent resistance to corrosion, ultraviolet degradation and abrasion. Black, bronze, silver and white are available
- **Weight:** 12.5 lbs. (5.7kg)

ELECTRICAL SYSTEM

- **Input Voltage:** 120-277V or 347-480V, 50/60Hz, Class 1 drivers
- **Power Factor:** > 0.9 at full load
- **Total Harmonic Distortion:** < 20% at full load
- Integral 6kV surge suppression protection standard
- When code dictates fusing, a slow blow fuse or type C/D breaker should be used to address inrush current
- **Operating Temperature Range:** Applications Requiring Class I, Division 2 Hazardous Location Ratings: -40°C to +25°C; A Input Power Designator: -40°C to +40°C (direct mount to plywood), -40°C to +45°C (direct mount to sheet metal/suspended); B & E Input Power Designators: -40°C to +35°C (plywood), -40°C to +40°C (sheet metal/suspended); C Input Power Designator: -40°C to +45°C (plywood), -40°C to +50°C (sheet metal/suspended); F Input Power Designator: -40°C to +40°C (plywood), -40°C to +45°C (sheet metal/suspended)
  WARNING: Exceeding maximum operating temperature may result in thermal foldback

CONTROLS

- Continuous dimming to 10% with 0-10V DC control protocol
- **10V Source Current:** 0.15mA
- Use only lighting controls with neutral connection or controls intended for use with LED fixtures
- Reference LED Dimming spec sheet for additional dimming information

REGULATORY & VOLUNTARY QUALIFICATIONS

- cULus Listed
- Suitable for wet locations when ordered with DM mount
- Suitable for damp locations when ordered with HC and PD mounts
- Suitable for wet locations when ordered with PD mount and HZ option
- Enclosure rated IP66 per IEC 60529 when ordered with DM mount
- Consult factory for CE Certified products
- 6kV surge suppression protection tested in accordance with IEEE/ANSI C62.41.2
- Meets FCC Part 15, Subpart B, Class A standards for conducted and radiated emissions
- Luminaire and finish endurance tested to withstand 5,000 hours of elevated ambient salt fog conditions as defined in ASTM Standard B 117
- Meets Buy American requirements within ARRA
- RoHS compliant. Consult factory for additional details
- Class I, Division 2 Hazardous Location rated when ordered with the DM or PD mount and the HZ option. A & C input power designators are available in UL voltage only. Not available with DIM, NSF or PML options. Rated for Groups A, B, C & D. Bears a T3C (160°C) temperature classification within a 25°C ambient
- NSF Certified when ordered with DM mount. Not available with HZ or PML options. Refer to http://info.nsf.org/Certified/Food/ for additional details
- DLC and DLC Premium qualified versions available. Please refer to https://www.designlights.org/search/ for most current information

Electrical Data*

Input Power Designator	System Watts 120-277V	System Watts 347-480V; 347/480V	Total Current (A)					
			120V	208V	240V	277V	347V	480V
A	60	68	0.51	0.29	0.25	0.22	0.20	0.14
B	96	96	0.82	0.47	0.40	0.35	0.28	0.20
C	31	33	0.26	0.15	0.13	0.11	0.10	0.07
E	145	145	1.22	0.70	0.61	0.53	0.42	0.30
F	85	85	0.72	0.41	0.36	0.31	0.24	0.18

* Electrical data at 25°C (77°F). Actual wattage may differ by +/- 10% when operating between 120-480V +/- 10%

Recommended CPY Series - Version B Lumen Maintenance Factors (LMF)[1]

Ambient	Initial LMF	25K hr Projected[2] LMF	50K hr Projected[2] LMF	75K hr Calculated[3] LMF	100K hr Calculated[3] LMF
5°C (41°F)	1.04	1.02	1.00	0.98	0.96
10°C (50°F)	1.03	1.01	0.99	0.97	0.95
15°C (59°F)	1.02	0.99	0.98	0.96	0.94
20°C (68°F)	1.01	0.98	0.96	0.95	0.93
25°C (77°F)	1.00	0.97	0.95	0.94	0.92
30°C (86°F)	0.99	0.96	0.94	0.93	0.91

[1] Lumen maintenance values at 25°C (77°F) are calculated per TM-21 based on LM-80 data and in-situ luminaire testing on sheet metal
[2] In accordance with IESNA TM-21-11, Projected Values represent interpolated value based on time durations that are within six times (6X) the IESNA LM-80-08 total test duration (in hours) for the device under testing (DUT) i.e. the packaged LED chip
[3] In accordance with IESNA TM-21-11, Calculated Values represent time durations that exceed six times (6X) the IESNA LM-80-08 total test duration (in hours) for the device under testing (DUT) i.e. the packaged LED chip

Photometry

All published luminaire photometric testing performed to IESNA LM-79-08 standards by a NVLAP accredited laboratory. To obtain an IES file specific to your project consult: http://lighting.cree.com/products/outdoor/canopy-and-soffit/cpy-series

DROP LENS

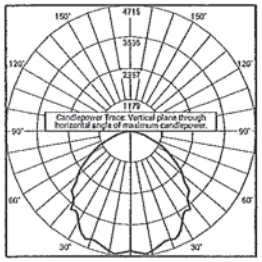

CESTL Test Report #: PL08412-001A
CPY250-B-**-D-B-UL-**-57K
Initial Delivered Lumens: 12,403

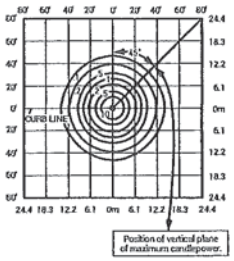

CPY250-B-**-D-B-UL-**-57K
Mounting Height: 15' (4.6m) A.F.G.
Initial Delivered Lumens: 12,860
Initial FC at grade

Drop Lens Distribution						
Input Power Designator	3000K		4000K		5700K	
	Initial Delivered Lumens*	BUG Ratings** Per TM-15-11	Initial Delivered Lumens*	BUG Ratings** Per TM-15-11	Initial Delivered Lumens*	BUG Ratings** Per TM-15-11
A	7,250	B3 U2 G1	7,600	B3 U2 G1	7,720	B3 U2 G1
B	11,850	B3 U2 G1	12,380	B3 U2 G1	12,860	B3 U2 G1
C	4,210	B2 U2 G1	4,420	B2 U2 G1	4,520	B2 U2 G1
E	19,100	B4 U3 G2	19,600	B4 U3 G2	20,080	B4 U3 G2
F	11,850	B3 U2 G1	12,380	B3 U2 G1	12,860	B3 U2 G1

* Initial delivered lumens at 25°C (77°F). Actual production yield may vary between -10 and +10% of initial delivered lumens
** For more information on the IES BUG (Backlight-Uplight-Glare) Rating visit: https://www.ies.org/wp-content/uploads/2017/03/TM-15-11BUGRatingsAddendum.pdf

FLAT LENS

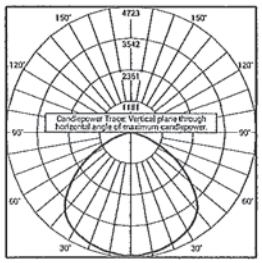

CESTL Test Report #: PL08165-001C
CPY250-B-**-F-B-UL-**-57K
Initial Delivered Lumens: 13,040

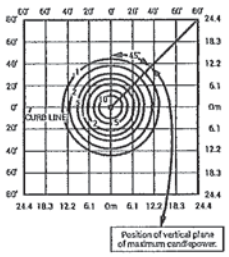

CPY250-B-**-F-B-UL-**-57K
Mounting Height: 15' (4.6m) A.F.G.
Initial Delivered Lumens: 12,860
Initial FC at grade

Flat Lens Distribution						
Input Power Designator	3000K		4000K		5700K	
	Initial Delivered Lumens*	BUG Ratings** Per TM-15-11	Initial Delivered Lumens*	BUG Ratings** Per TM-15-11	Initial Delivered Lumens*	BUG Ratings** Per TM-15-11
A	7,250	B3 U0 G1	7,600	B3 U0 G1	7,720	B3 U0 G1
B	11,850	B3 U0 G1	12,380	B3 U0 G1	12,860	B3 U0 G1
C	4,210	B2 U0 G1	4,420	B2 U0 G1	4,520	B2 U0 G1
E	19,100	B4 U0 G1	19,600	B4 U0 G1	20,080	B4 U0 G1
F	11,850	B3 U0 G1	12,380	B3 U0 G1	12,860	B3 U0 G1

* Initial delivered lumens at 25°C (77°F). Actual production yield may vary between -10 and +10% of initial delivered lumens
** For more information on the IES BUG (Backlight-Uplight-Glare) Rating visit: https://www.ies.org/wp-content/uploads/2017/03/TM-15-11BUGRatingsAddendum.pdf

CPY250® LED Canopy/Soffit Luminaire - Version B

HC Mount

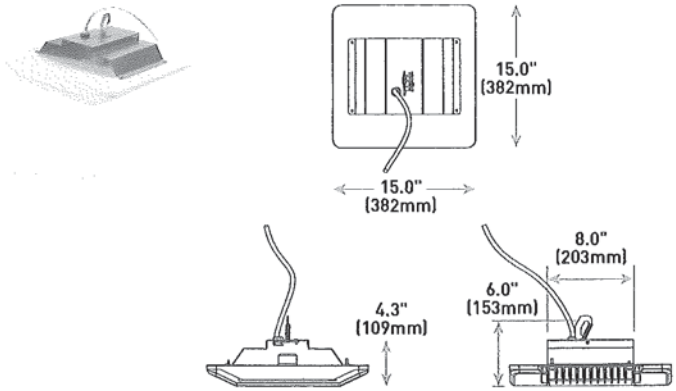

PD Mount

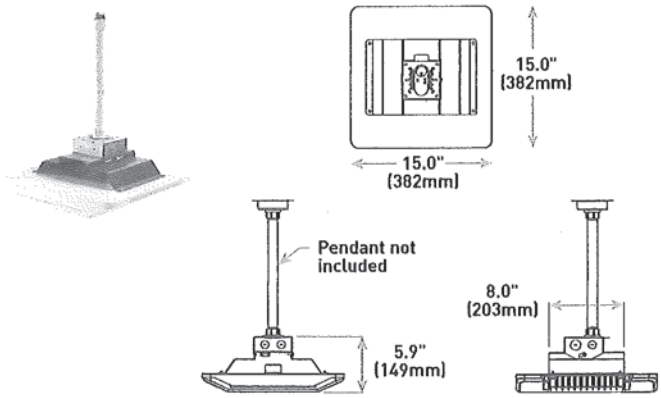

PD Mount w/HZ Option

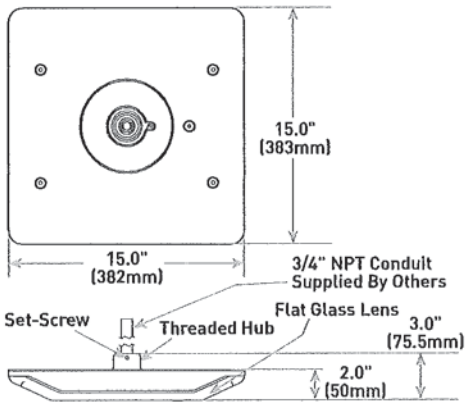

© 2017 Cree, Inc. and/or one of its subsidiaries. All rights reserved. For informational purposes only. Content is subject to change. Patent www.cree.com/patents. Cree®, Colorfast DeltaGuard® and CPY250® are registered trademarks, and the Cree logo is a trademark of Cree, Inc. The UL logo is a registered trademark of UL LLC. The NSF logo is a registered trademark of NSF International. The DLC QPL logo is a registered trademark, and the DLC QPL Premium logo is a trademark of Northeast Energy Efficiency Partnerships, Inc.

US: lighting.cree.com T (800) 236-6800 F (262) 504-5415

Canada: www.cree.com/canada T (800) 473-1234 F (800) 890-7507

ORIGINAL PROPOSED CANOPY DESIGN

1950’S HISTORIC PHOTO

SOHIO

SHAKER HEIGHTS

Memorandum

To: Members of the Landmark Commission

From: Cameron Roberts, Planner

Date: 09/17/2020

Re: Landmark Commission Staff Approval Report: Aug. 20, 2020 – Sept. 16, 2020

Meeting: 09/23/2020

Staff Approvals

Landmark Commission has the authority to direct some approvals to staff for administrative review. The following staff approvals occurred since the previous staff approval report in August 2020.

Date	Address	Type	Color	Manufacturer	Material	Notes
9/2/2020	3113 Van Aken Boulevard	Fence			Wood	